PHCbi

# Operating Instructions

## $O_2$/$CO_2$ Incubator

# MCO-5M Series


Please read the operating instructions carefully before using this product, and keep the operating instructions for future use.

See page 52 for model number.

# CONTENTS

# INTRODUCTION

■ Read the operating instructions carefully before using the Product and follow the instructions for safety operation.

■ PHC Corporation disavows any responsibility for safety if the Product is used for other than the intended use or used with any procedures other than those given in the operating instructions.

■ Keep the operating instructions in a suitable place so that it can be referred to as necessary.

■ The contents of the operating instructions are subject to change without notice for improvement of performance or functions.

■ Contact our sales representative or agent if any page of the operating instructions is lost or the page order is incorrect.

■ Contact our sales representative or agent if any point in the operating instructions is unclear or if there are any inaccuracies.

■ No part of the operating instructions may be reproduced in any form without the expressed written permission of PHC Corporation.

## IMPORTANT NOTICE

PHC Corporation guarantees this product under certain warranty conditions. However, please note that PHC Corporation shall not be responsible for any loss or damage to the contents of the product.

# PRECAUTIONS FOR SAFE OPERATION

**It is imperative that the user complies with the operating instructions as it contains important safety advice.**

Items and procedures are described so that you can use this unit correctly and safely. If the precautions advised are followed, this will prevent possible injury to the user and any other person.

Precautions are illustrated in the following way:

## ⚠WARNING

Failure to observe WARNING signs could result in a hazard to personnel possibly resulting in serious injury or death.

## ⚠CAUTION

Failure to observe CAUTION signs could result in injury to personnel and damage to the unit and associated property.

Symbol shows;

△ This symbol means caution.

⃠ This symbol means an action is prohibited.

● This symbol means an instruction must be followed.

Be sure to keep the operating instructions in a place accessible to users of this unit.

**⚠WARNING**

As with any equipment that uses $CO_2$ gas, there is a likelihood of oxygen depletion in the vicinity of the equipment. It is important that you assess the work site to ensure there is suitable and sufficient ventilation. If restricted ventilation is suspected, then other methods of ensuring a safe environment must be considered. These may include atmosphere monitoring and warning devices.

# PRECAUTIONS FOR SAFE OPERATION

USA Only (Model with a lamp): This product has a lamp that contains mercury. Disposal may be regulated in your community due to environmental considerations. For disposal or information, please visit PHC website: https://www.phchd.com.

**Contains mercury / Contenu avec mercure**

For more information on safe handling procedures, the measures to be taken in case of accidental breakage and safe disposal options visit: ec.gc.ca/mercure-mercury/.
Dispose of or recycle in accordance with applicable laws.

Pour plus de renseignements sur les procédures de manutention sécuritaire, les mesures à prendre en cas de bris accidentel et les options d'élimination sécuritaire visitez: ec.gc.ca/mercure-mercury/.
Mettez au rebut ou recyclez conformément aux lois applicables.

# ⚠WARNING

**Do not use the unit outdoors.** Current leakage or electric shock may result if the unit is exposed to rain water.

**Only qualified engineers or service personnel should install the unit.** The installation by unqualified personnel may cause electric shock or fire.

**Install the unit on a sturdy floor and take an adequate precaution to prevent the unit from turning over.** If the floor is not strong enough or the installation site is not adequate, this may result in injury from the unit falling or tipping over.

**Never install the unit in a humid place or a place where it is likely to be splashed by water.** Deterioration of the insulation may result which could cause current leakage or electric shock.

**Never install the unit in a flammable or volatile location.** This may cause explosion or fire.

**Never install the unit where acid or corrosive gases are present** as current leakage or electric shock may result due to corrosion.

**Always ground (earth) the unit to prevent electric shock.** If the power supply outlet is not grounded, it will be necessary to install a ground by qualified engineers.

**Never ground the unit through a gas pipe, water main, telephone line or lightning rod.** Such grounding may cause electric shock in the case of an incomplete circuit.

**Connect the unit to a power source as indicated on the rating label attached to the unit.** Use of any other voltage or frequency other than that on the rating label may cause fire or electric shock.

**Never store volatile or flammable substances** in this unit if the container cannot be sealed. These may cause explosion or fire.

**Do not insert metal objects such as a pin or a wire into any vent, gap or any outlet on the unit.** This may cause electric shock or injury by accidental contact with moving parts.

**Use this unit in safe area when treating the poison, harmful or radiate articles.** Improper use may cause bad effect on your health or environment.

**Turn off the power switch (if provided) and disconnect the power supply to the unit prior to any repair or maintenance** of the unit in order to prevent electric shock or injury.

**Do not touch any electrical parts (such as power supply plug) or operate switches with a wet hand.** This may cause electric shock.

# PRECAUTIONS FOR SAFE OPERATION

## ⚠WARNING

**Ensure you do not inhale or consume medication or aerosols** from around the unit at the time of maintenance. These may be harmful to your health.

**Never splash water directly onto the unit** as this may cause electric shock or short circuit.

**Never put containers with liquid on the unit** as this may cause electric shock or short circuit when the liquid is spilled.

**Never bind, process, or step on the power supply cord, or never damage or break the power supply plug.** A broken power supply cord or plug may cause fire or electric shock.

**Do not use the power supply cord if its power supply plug is loose.** Such power supply cord may cause fire or electric shock.

**Never disassemble, repair, or modify the unit yourself.** Any such work carried out by an unauthorized person may result in fire, or electric shock or injury due to a malfunction.

**Disconnect the power supply plug if there is something wrong with the unit.** Continued abnormal operation may cause electric shock or fire.

**When removing the power supply plug from the power supply outlet, grip the power supply plug,** not the cord. Pulling the power supply cord may result in electric shock or fire by short circuit.

**Disconnect the power supply plug** before moving the unit. Take care not to damage the power supply cord. A damaged power supply cord may cause electric shock or fire.

**Disconnect the power supply plug when the unit is not used for long periods.** Keeping the connection may cause electric shock, current leakage, or fire due to the deterioration of insulation.

If the unit is to be stored unused in an unsupervised area for an extended period, **ensure that children do not have access and that doors cannot be closed completely.**

**The disposal of the unit should be accomplished by appropriate personnel.** Remove doors to prevent accidents such as suffocation.

**Do not put the packing plastic bag within reach of children** as suffocation may result.

**Do not position this unit and the other unit so that it is difficult to operate the disconnection of the power supply plug.** Failure to disconnect the power supply plug may cause fire if there is something wrong with the unit.

# ⚠CAUTION

- This unit must be plugged into a dedicated circuit protected by branch circuit breaker.
- Use a dedicated power source as indicated on the rating label attached to the unit. A multiple-tap may cause fire resulting from abnormal heating.
- **Never store corrosive substances such as acid or alkali** in this unit if the container cannot be sealed. These may cause corrosion of inner components or electric parts.
- **Check the setting when starting up of operation after power failure or turning off of power switch.** The stored items may be damaged due to the change of setting.
- **Be careful not to tip over the unit** during movement to prevent damage or injury.
- **Prepare a safety check sheet** (copy the last page) when you request any repair or maintenance for the safety of service personnel.

# LABELS ON THE INCUBATOR

Warning and caution labels are attached to the incubator. The following table describes the labels.

| | |
|---|---|
| | This label is attached to covers that access high-voltage electrical components to prevent electric shock. Only a qualified engineer or service personnel should be allowed to open these covers. |
| | This symbol indicates an ultraviolet light (UV) caution. |
| | This symbol indicates that caution is required. Refer to product documentation for details. |
| | This symbol indicates a hot surface. |
| | This symbol indicates an earth. |
| I | This symbol means “ON” for a power switch. |
| O | This symbol means “OFF” for a power switch. |

# ENVIRONMENTAL CONDITIONS

This equipment is designed to be safe at least under the following conditions (based on the IEC 61010-1):

■ Indoor use;

■ Altitude up to 2000 m;

■ Temperature 5 ºC to 40 ºC

■ Maximum relative humidity 80 % for temperature up to 31 ºC decreasing linearly to 50 % relative humidity at 40 ºC;

■ Mains supply voltage fluctuations up to ±10 % of the nominal voltage;

■ Transient overvoltages up to the levels of OVERVOLTAGE CATEGORY II;

■ Temporary OVERVOLTAGES occurring on the mains supply;

■ Applicable pollution degree of the intended environment (POLLUTION DEGREE 2 in most cases);

# INCUBATOR COMPONENTS

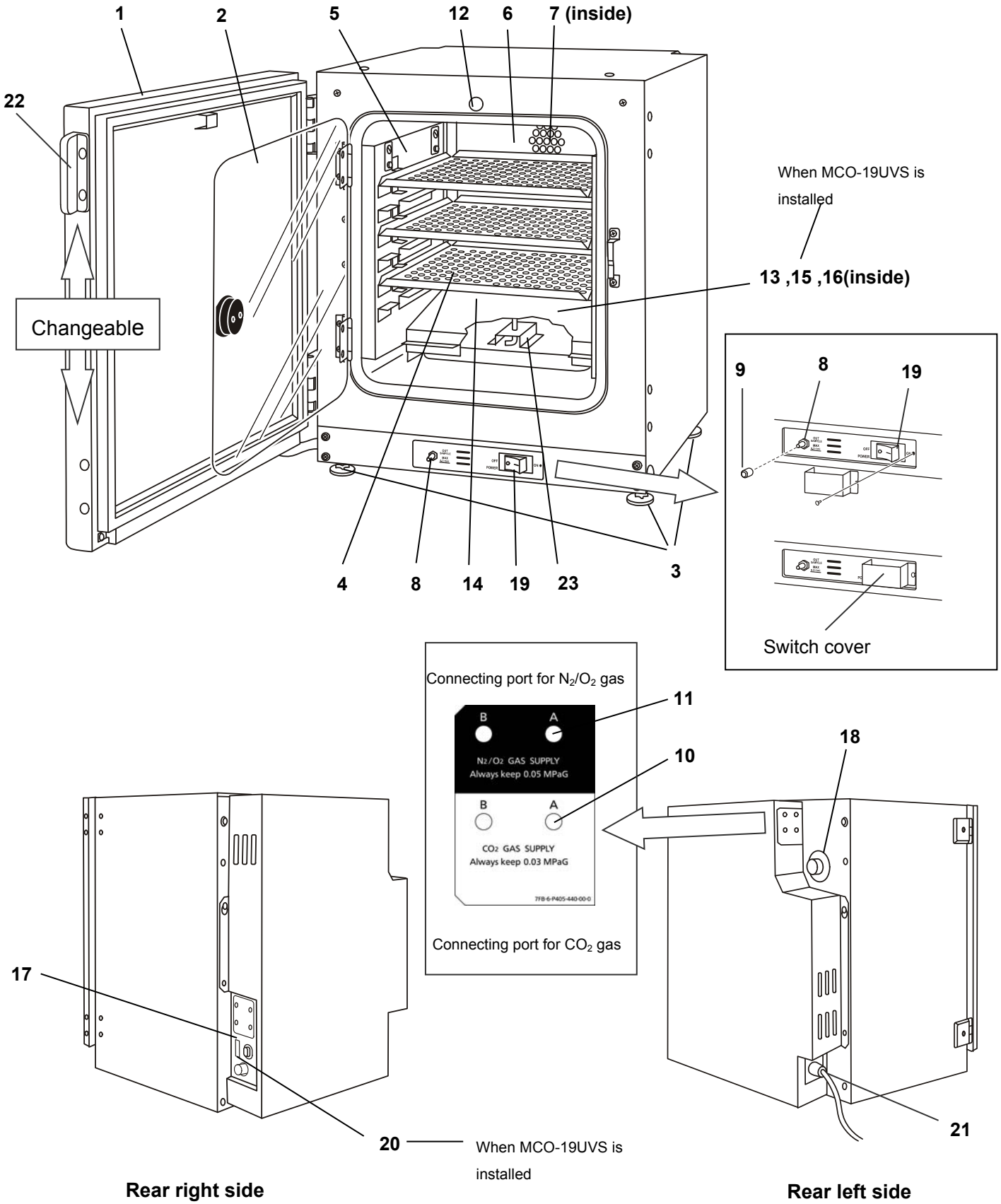

# INCUBATOR COMPONENTS

**1. Outer door:** Sticks to frame with magnetic seal. Door heater is installed in the door panel. The door opening is reversible. Contact our sales representative or agent to change the door hinge from left to right or vice versa.

**2. Inner door:** Made of tempered glass, however avoid excessive impact on the glass.

**3. Leveling feet:** Screw type for adjusting the height. Adjust the feet so that the unit can be level.

**4. Tray:** Can be pulled toward you.

**5. Side support:** Right and left side supports can be removed for disinfection. See page 22 and 23.

**6. Rear duct:** Flow path for circulating air. Removable.

**7. Fan (inside the rear duct):** Made from polypropylene resin. Can be sterilized by an autoclave.

**8. Sample air outlet:** This also functions as an internal gas outlet. Use only a supplied cap(9).

**9. Sample air outlet cap:** Always attach this cap except at the time of using of sample air outlet.

**10. Connecting port A/B for $CO_2$ gas pipe (rear side):** When an optional component MCO-5GC (gas auto changer) is installed, both A and B are available. If MCO-5GC is not installed, only A is available. Refer to page 16 for gas cylinder connection. Ensure that the gas pressure is set at 0.03 MPa(G) (0.3 kgf/cm$^2$(G), 4.4 psi(G)). Refer to page 31 for automatic gas cylinder changeover.

**11. Connecting port A/B for $N_2$/$O_2$ gas pipe (rear side):** Refer to page 17 for gas cylinder connection. Ensure that gas pressure is set at 0.05 MPa(G) (0.5 kgf/cm$^2$(G), 7.3 psi(G)). Refer to page 31 for automatic gas cylinder changeover.

**12. Door switch:** Detects the door opening/closing and stops the circulating fan and electromagnetic valve for $CO_2$ and $N_2$/$O_2$ when door is open. UV lamp is also deactivated by door opening (When an optional UV system set MCO-19UVS is installed).

**13. Humidifying pan:** Use sterile distilled water to fill the humidifying pan.

**14. Humidifying pan cover:** Prevents UV light being exposed to the chamber. When filling the humidifying pan, lift the front side and take out the humidifying pan. See page 25 for details.

**15. UV lamp** (When an optional UV system set MCO-19UVS is installed)**:**
This UV lamp does not generate ozone. Never look at the UV light directly. For replacement, contact our sales representative or agent.

**16. Water level sensor:** Detects the water level in the humidifying pan. See page 26 for details.

**17. Remote alarm terminal:** Refer to page 13.

**18. Access port:** When not in use, cap with the silicon caps on both outside and inside.

**19. Power switch:** Main switch of the unit (ON-“I”, OFF-“O”). Also functions as an over-current breaker. The switch is covered by a switch cover to prevent the accidental push. To turn on or off the switch, remove the switch cover by loosening the screw. See figure on the right.

**20. Glow starter** (When an optional UV system set MCO-19UVS is installed)**:** For UV lamp (model; FG-7P)

**21. Power supply removable cord**

**22. Handle:** Outer door handle. When moving the handle from upper to a lower position remove it from original position first, then remove two cups and screws at the lower position and attach the handle there.

**23. Gas injection nozzle:** Refer to page 18.

# Control panel and keypad

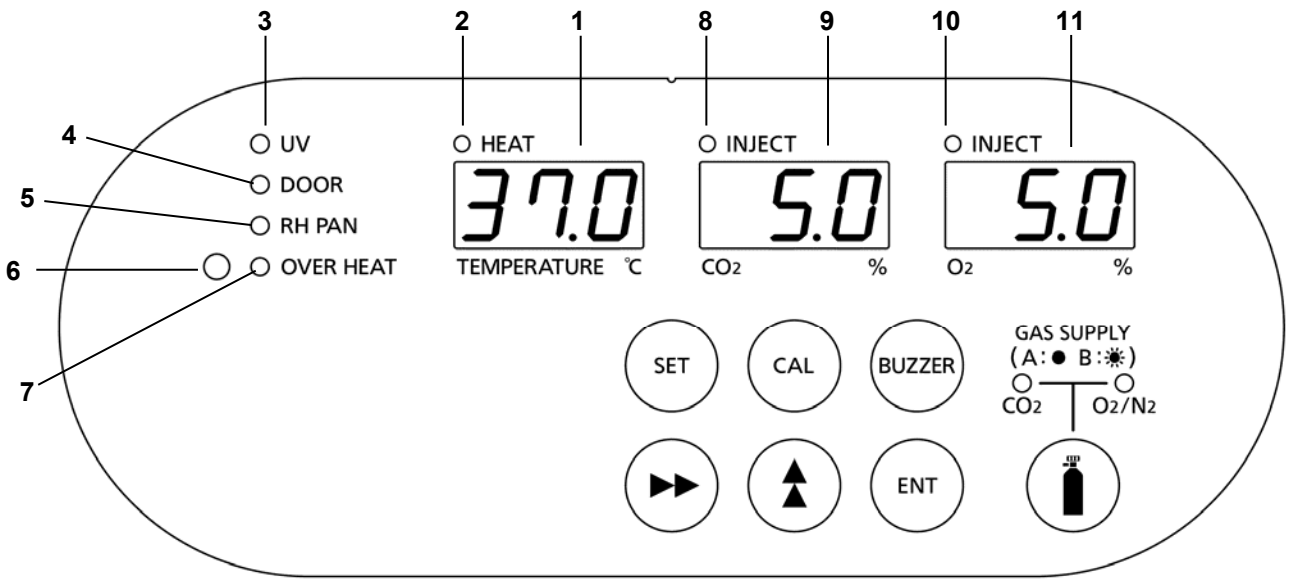


**1. Digital temperature indicator** (TEMPERATURE ºC): Normally, this indicator shows the chamber temperature. In the setting mode, it shows the set value of the chamber temperature. If the self diagnostic function detects any abnormality, an error code will be displayed.

**2. Heater lamp** (HEAT): This lamp lights when the heater is energized.

**3. UV indicator** (UV): This lamp lights when the UV lamp is ON. The blink of this indicator recommends the replacement of UV lamp. See page 33 for the details.

**4. Door lamp** (DOOR): This lamp lights when the outer door is open.

**5. Water level alarm lamp** (RH PAN): This lamp blinks when the water in the humidifying pan is less than approximately 0.8 liter.

**6. High limit regulator**: This regulator is used to set the high limit temperature.

**7. Over heat lamp** (OVER HEAT): This lamp lights when the chamber temperature reaches the high limit set value.

**8. $CO_2$ inject lamp** (INJECT): This lamp lights when $CO_2$ gas is being injected.

**9. Digital $CO_2$ density indicator** ($CO_2$ %): Normally, this indicator shows the $CO_2$ density in the chamber. In the setting mode, it indicates the set value of the $CO_2$ density. The empty gas supply line is displayed when $CO_2$ gas cylinder becomes empty (only when MCO-5GC is installed). See page 31 for details.

**10. $O_2$ inject lamp** (INJECT): This lamp lights when $N_2$ or $O_2$ gas is being injected.

**11. Digital $O_2$ density indicator** ($O_2$ %): Normally, this indicator shows the $O_2$ density in the chamber. In the setting mode, it indicates the set value of the $O_2$ density. The empty gas supply line is displayed when $N_2$ or $O_2$ gas cylinder becomes empty (only when MCO-5GC is installed). See page 31 for details.

# INCUBATOR COMPONENTS

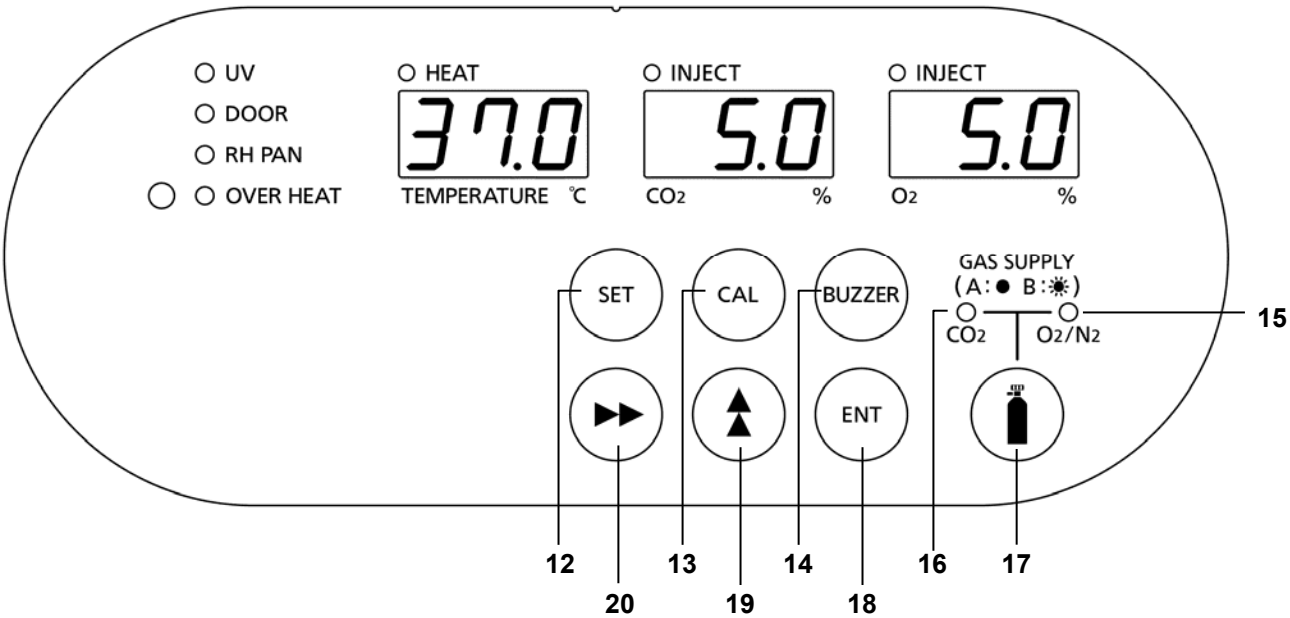


**12. Set key** (SET): Pressing this key to enter the setting mode, and the digits to be set will blink.

**13. Calibration key** (CAL): By pressing this key for approximately 5 seconds, the unit enters calibration function mode. See page 39 for the details. Also, used to change the UV lamp ON period. See page 34 for the details.

**14. Alarm buzzer stop key** (BUZZER): Press this key to silence the buzzer when the alarm operates and the buzzer sounds.

**15. $N_2$/$O_2$ gas supply line indicator** (A/B): The lamp for the $N_2$/$O_2$ gas supply line currently in use lights up. (Lamp ON; cylinder A, Lamp blinks; cylinder B)

**16. $CO_2$ gas supply line indicator** (A/B): The lamp for the $CO_2$ gas supply line currently in use lights up provided that gas auto changer MCO-5GC is installed. (Lamp ON; cylinder A, Lamp blinks; cylinder B)

**17. Gas supply line switching key** (GAS SUPPLY): This is a key to select $N_2$ or $O_2$ gas supply. By pressing this key, the $N_2$ or $O_2$ gas supply line (A/B) is changed in $O_2$ density set mode. The supply line is changed automatically when $N_2$ or $O_2$ gas cylinder is empty. Similarly, by pressing this key in $CO_2$ density set mode, $CO_2$ gas supply line is changed automatically when a gas auto changer MCO-5GC (option) is installed. The supply line is changed automatically when $CO_2$ gas cylinder is empty.

**18. Enter key** (ENT): Pressing this key memorizes the set value in the controller.

**19. Numerical value shift key** (▲): Pressing this key in the setting mode causes the numerical value to shift. In key lock mode, pressing this key makes key lock ON or OFF.

**20. Digit shift key** (▶▶): Pressing this key in the setting mode causes the changeable digit to shift. Pressing this key more than 5 seconds enters key lock mode. See page 30 for the key lock.

# Remote alarm terminals

The remote alarm terminal is located at the rear right side.

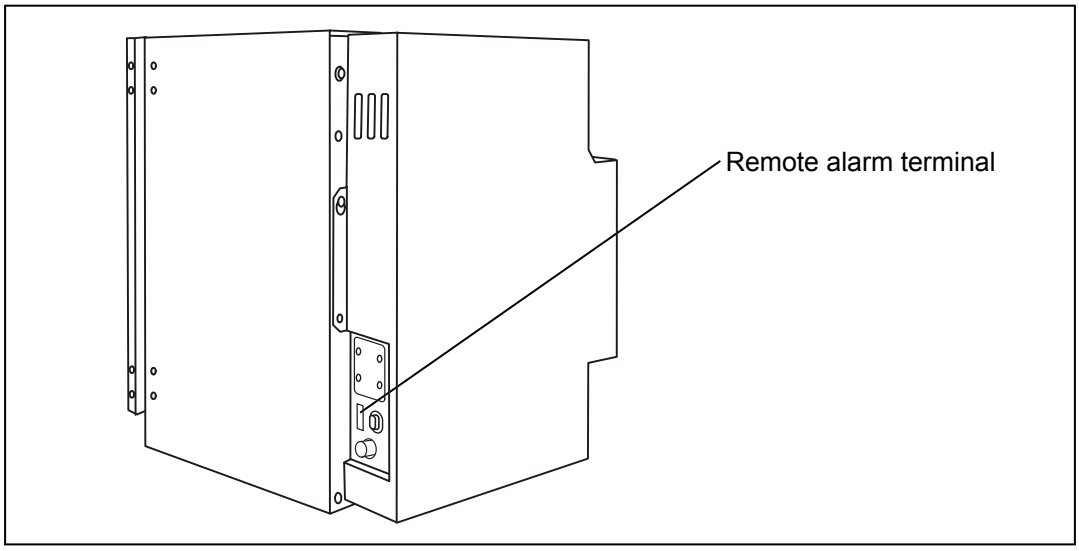


The remote alarm terminal is a contact output.

| | | |
|---|---|---|
| Normal | : | OPEN |
| Abnormal , blackout | : | CLOSE |
| Contact capacity | : | DC 30 V, 2 A |

**Note:**

• When the power switch is OFF or the power failure condition, the contact output is CLOSE.

• The remote alarm cannot be silenced by pressing the alarm buzzer stop key (BUZZER) since the remote alarm is not conjunct with the alarm buzzer stop key (BUZZER) key.

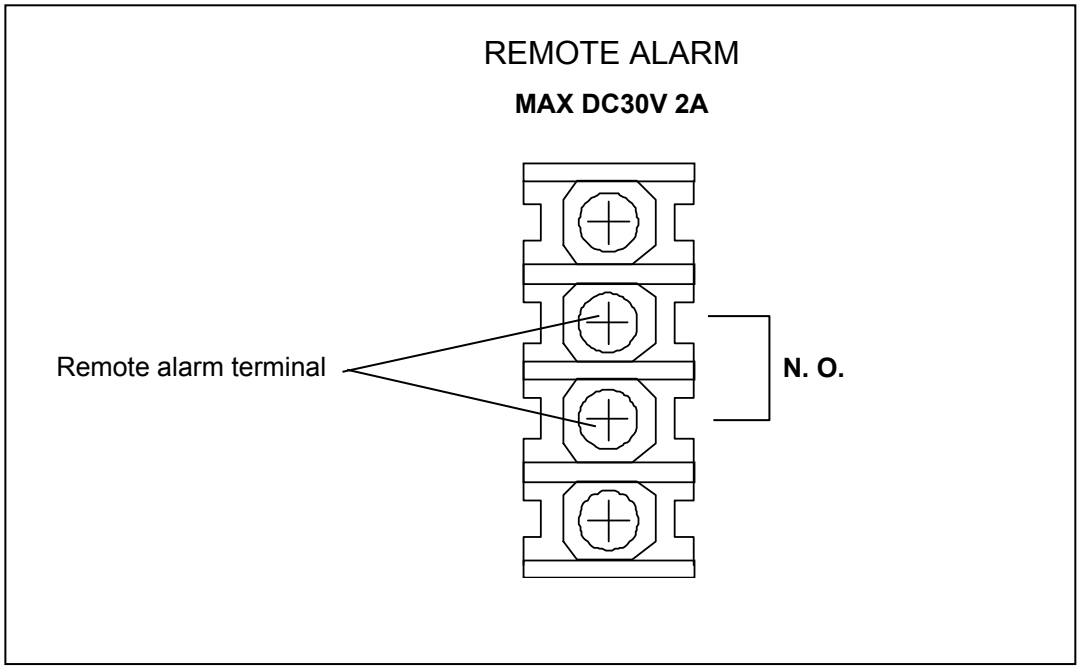

# INSTALLATION SITE

For correct operation of the incubator, install it in a location with the following conditions.

**⚠WARNING**

When using $CO_2/N_2$ gas for control, **make sure that there is adequate ventilation**. Using $CO_2/N_2$ gas in a small room without adequate ventilation may cause gas poisoning or oxygen deprivation. In addition, when opening the incubator doors, do not directly inhale the air in the chamber.

Si l'appareil est utilisé dans un evdroit restreint, le niveau de la densite $CO_2/N_2$ de l'air peut s'élever et peut être nocif aux humains. Evitez d'aspirer l'air provenant de l'inérieur de l'appareil quand vous ouverz la porte.

● **Normal air environment**

Install the incubator in an environment with normal air.

● **Do not expose to direct sunlight**

Do not install the incubator in a location where it will be exposed to direct sunlight. If the incubator is operated in direct sunlight, performance will be adversely affected.

● **Separate from heat sources**

Do not install the incubator near significant heat sources, such as heaters, boilers, ovens, or autoclaves. Heat will adversely affect the performance of the incubator.

● **Ambient temperature at least 5 °C lower than set temperature**

The control temperature of the incubator is at least 5 °C higher than the ambient temperature. For example, if the chamber is controlled at 37 °C, the ambient temperature must normally be no more than 32 °C. Do not allow the ambient temperature to become too high.

● **Strong and level floor**

Select a site with a strong and level floor. If the floor is uneven or the installation is not level, the incubator will be unstable and this may cause accident or injury. To avoid vibration and noise, always make sure that the installation is stable. An unstable surface may result in vibration or noise.

**⚠WARNING**

**Install the incubator at a location that can support the weight.** If the floor is not strong enough or if the installation is insufficient, the incubator may fall over and cause injury.

**Always make sure that the floor is strong, even, and level, and that the incubator will not tip over**. An insufficient installation may result in injury due to water leakage or the incubator falling over.

● **Low humidity**

Select a site with a relative humidity of 80 %R.H. or lower. Using the incubator in high humidity may result in current leakage or electric shock.

**⚠WARNING**

**Do not use the incubator outdoors.** If the incubator is exposed to rain water, it may result in current leakage or electric shock.

**Never install the Incubator in a moist location, such as near a sink or water line, or where it is likely to be exposed to water.** In addition, **do not install it near water or steam pipes**. Moisture can cause the insulation to deteriorate, which may result in current leakage or electric shock.

● **No inflammable or corrosive gas**

Never install the incubator in a location where it will be exposed to inflammable or corrosive gas. Doing so may result in explosion or fire. In addition, insulation may deteriorate due to corrosion of protective casing, resulting in current leakage or electric shock.

● **No falling objects**

Do not install the incubator in a location where there is the possibility of objects falling from above. Doing so may result in damage or accident.

# INSTALLATION

**1. Remove the packing tape and clean up.**

Remove all the tape that is securing the doors and inner attachments. Open the doors for ventilation. If the outer panels are dirty, dampen a cloth with a diluted neutral detergent and wipe them. (Using an undiluted solution may damage the plastic. Follow the diluting instructions for the detergent that is used.) Wipe off the residual detergent with a wet cloth and then wipe off any moisture.

**Note:**

Remove the cable tie banding the power supply removable cord. Prolonged banding may cause the corrosion of the cord coating.

**⚠WARNING**

**Do not leave plastic wrapping bags within reach of children.** If a bag is placed over a child's head, it can block the mouth and nose and cause suffocation.

**2. Adjust the leveling feet.**

Adjust the leveling feet by turning them counterclockwise to level the incubator. (See the illustration on the right.)

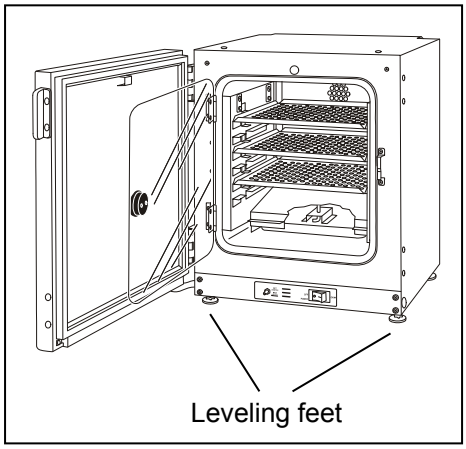


**3. Ground the incubator.**

Ground the incubator during installation to prevent electric shock in case the insulation is not sufficient. If there is no ground wire at the location, consult with qualified service personnel.

● **When a ground must be installed**

If a grounded 3-pole outlet is not available, then a ground must be installed. Consult with qualified service personnel.

**⚠WARNING**

To prevent electric shock, **always ground the incubator.** If grounding is not possible, then have a ground installed by qualified personnel. If the incubator is not grounded, it may result in electric shock.

**Never connect the ground wire to a gas pipe, water pipe, lightning rod, or telephone ground wire.** Doing so may cause electric shock.

● **Installing a ground fault circuit breaker**

If using the incubator in a location with moisture or humidity cannot be avoided, then it is recommended that a ground fault circuit breaker be installed in the power supply circuit (i.e., the power supply at the incubator). Have the circuit breaker installed by qualified service personnel.

**⚠CAUTION**

**Do not climb on the incubator or place objects on top of it.** Doing so may damage it or cause it to fall over, resulting in injury. If it is to be stacked, refer to page 49 and stack it securely.

● **When the incubator is not in use**

Empty the water from the humidifying pan and remove moisture from the chamber. Make sure that the chamber is completely dry before closing the doors. Failure to do so may result in damage.

● **Before moving the incubator**

Before moving the incubator, empty the water from the humidifying pan, disconnect the power supply plug from the outlet, and make sure that the power supply cord will not be damaged. Failure to do so may result in electric shock or fire.

## Connecting a $CO_2$ gas cylinder

**⚠WARNING**

When connecting a gas cylinder to the incubator, **confirm the gas type**. **Confirm that the connections are secure and that no gas will escape**. **Be sure to use the specified pressure**. Using an incorrect gas or pressure may result in explosion or fire, or in gas poisoning or oxygen deprivation due to escaping gas.

**Install the incubator in a location with adequate ventilation.** If adequate ventilation cannot be provided, then install an alarm system using $CO_2$ and $O_2$ densitometers.

**1.** Use a liquefied $CO_2$ gas cylinder (at least 99.5 % pure). The siphon (dip tube) type cannot be used.

**2.** Install a gas regulator rated at 25 MPa(G) (250 kgf/cm$^2$(G), 3600 psi(G)) for the primary pressure, and 0.25 MPa(G) (2.5 kgf/cm$^2$(G), 36 psi(G)) for the secondary pressure on the $CO_2$ gas cylinder.

**3.** Using the gas tube that is provided, connect the gas regulator to the connecting port A/B for $CO_2$ gas pipe (located at the rear left side of the incubator).

**Note:**

If $CO_2$ is supplied to multiple $CO_2$ incubators from a single gas cylinder, a $CO_2$ solid will be formed in the gas regulator. The gas regulator safety valve will operate, and there may an explosive sound.

**When the MCO-5GC is not mounted**

Using the gas tube that is provided, connect the gas regulator for the $CO_2$ gas cylinder to connecting port A for $CO_2$ gas pipe on the incubator. After connecting the gas tube, check to make sure that no gas is leaking.

**When the MCO-5GC is mounted**

Connect a pair of $CO_2$ gas cylinders with gas regulators independently. The gas supply line will be switched automatically. Connect the main cylinder to connecting port A for $CO_2$ gas pipe and the reserve cylinder to connecting port B for $CO_2$ gas pipe. After connecting the cylinders, check to make sure that no gas is leaking.

● For details on installing the optional gas auto changer (MCO-5GC), refer to the MCO-5GC installation guide. For details on using the MCO-5GC, refer to page 31.

**4.** Set the $CO_2$ gas on the secondary side to 0.03 MPa(G) (0.3 kgf/cm$^2$(G), 4.4 psi(G)) for gas injection. As the pressure increases, the $CO_2$ gas density control range will increase. Excessive pressure may cause gas supply lines inside the incubator to come loose, which may result in gas poisoning or oxygen deprivation due to the escaping of gas. If gas lines come loose, the incubator must be repaired.

● The gas lines connected to the incubator will degrade over time. If any deterioration or abnormalities are found during inspection, replace the lines immediately.

# Connecting a $N_2$ (or $O_2$ ) gas cylinder

**⚠WARNING**

**Check the gas type and ensure that it is fit for the purpose. Make sure that all pipes are connected correctly and are not liable to become disconnected. Ensure that the gas pressure is set at the specified value. Improper connection of the gas pipe or use of incorrect gas pressure may result in leakage of gas. Elevated level of gas can be hazardous to health and may lead to asphyxiation and risk of death.**

This incubator needs $N_2$ or $O_2$ gas depending on the setting of $O_2$ density. The selection is as follows:

When the setting of $O_2$ density is less than 18 %: $N_2$ gas

When the setting of $O_2$ density is more than 22 %: $O_2$ gas

$O_2$ density in the atmosphere is about 20 %. For the control of $O_2$ density in the chamber, $O_2$ gas is diluted by $N_2$ gas when the setting of $O_2$ density is less than that of the atmosphere. On the contrary, $O_2$ gas is added when the setting of $O_2$ density is more than that of the atmosphere.

**1.** Install a gas regulator rated at 25 MPa(G) (250 kgf/cm$^2$(G), 3600 psi(G)) on the primary side and 0.2 5MPa(G) (2.5 kgf/cm$^2$(G), 36 psi(G)) on the secondary side on $N_2$ or $O_2$ gas cylinder.

**2.** Using the gas supply tube provided, connect the gas regulator to the connecting port A/B for $N_2$ or $O_2$ gas pipe located at the rear left side of the incubator. Connect the main cylinder to the connecting port A for $N_2$ or $O_2$ gas pipe and connect the sub-cylinder to the connecting port B for $N_2$ or $O_2$ gas pipe so that the gas supply can be switched automatically when one gas cylinder is empty. Connect the same gas type to both connecting port A and B for $N_2$ or $O_2$ gas pipe . Never connect $N_2$ gas and $O_2$ gas at the same time to the connecting port A and B for $N_2$ or $O_2$ gas pipe respectively.

**3.** Set the $N_2$ or $O_2$ gas pressure on the secondary side to 0.05 MPa(G) (0.5 kgf/cm$^2$(G), 7.3psi(G)) (at gas injection). The higher gas pressure makes control range of $O_2$ density wider. In addition, excessive pressure may cause disconnection of internal pipes inside the incubator, which will result in leakage of $N_2$ or $O_2$ gas into the atmosphere. **Elevated level of $CO_2$ gas or $O_2$ gas can be hazardous to health and may lead to asphyxiation and risk of death or fire by gas leakage.** The repair of the incubator will be necessary if the internal pipe is disconnected.

**4.** Check that no gas is leaking at any point where the pipe connects with the gas regulator or the incubator.

● The gas lines connected to the incubator will degrade over time. If any deterioration or abnormalities are found during inspection, replace the lines immediately.

**⚠WARNING**

$O_2$ gas increases the susceptibility of substances to burn. Take care of the handling of flame in a room where the incubator is installed.

## Connecting a gas injection nozzle

In the case of control of $O_2$ density in the chamber, connect the gas injection nozzle to the gas injection port by using the gas injection nozzle tube enclosed (inner diameter; 5 mm, outer diameter; 9 mm, length; 300 mm). This helps faster recovery of humidity after opening of the inner door.
Fill the humidifying pan with sterile distilled water so that the gas injection nozzle can be under the water level.

**1.** Inside of unit is arranged as shown in Fig. 1 when humidifying pan cover removed. There is a gas injection port in the lower left-hand corner.

**2.** Connect gas injection nozzle to gas injection port using gas injection nozzle tube. (Fig. 2)

**3.** Connecting gas injection nozzle is as shown in Fig. 3.

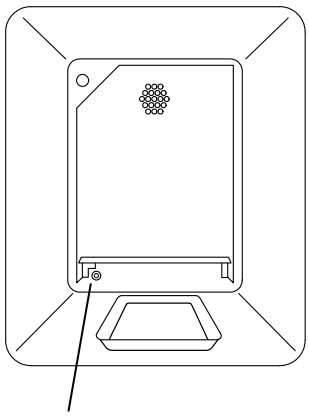


Fig.1

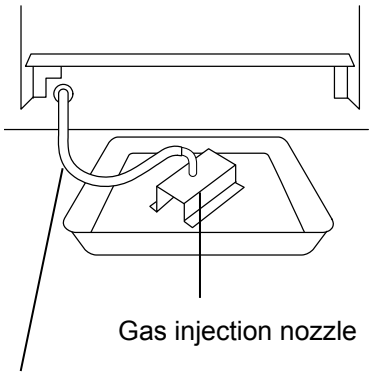


Fig.2

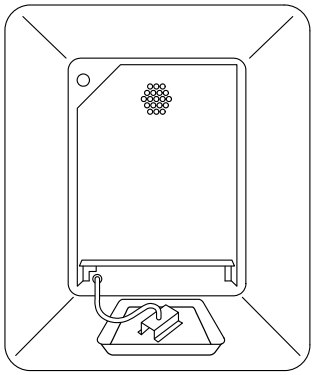

Fig.3

# PREVENTING CONTAMINATION

To prevent contamination of the chamber, select a suitable installation site.

● **Avoid locations with high temperatures or humidity.**
Avoid locations with high temperatures or humidity, because of a greater presence of microorganisms in the air.

● **Avoid locations with passers-by or drafts.**
Avoid locations near doors, air conditioners, fans, etc., where passers-by or drafts can facilitate the entry of microorganisms into the chamber.

● **If possible, use a cleanroom.**
To achieve a better culture, it is recommended that a cleanroom be used if one is available.

● **Use clean containers.**
The greatest cause of contamination is dirty containers for cultures. Be careful not to get containers or trays dirty when taking them in and out.

● **Keep the chamber clean.**
Wipe off any fingerprints. If water spills from the humidifying pan, or if the doors are left open for a long time, condensation may form on the inside of the doors. If that occurs, wipe off the condensation with a dry sterile gauze. In particular, clean and disinfect the chamber if the culture medium is spilled. For details, refer to “ROUTINE MAINTENANCE “on page 27.

● **Fill with sterile distilled water in the humidifying pan.**
Always fill with sterile distilled water in the humidifying pan, and replace once a week.
The water level alarm lamp (RH PAN) on the control panel blinks when the water level is low. Quickly refill the sterile distilled water in the humidifying pan when the water level alarm blinks. Adding low-temperature water will significantly lower the temperature in the chamber. Clean the humidifying pan once a month.

● **Keep the incubator out of direct airflows from air conditioners or fans.**
Cool airflow from an air conditioner may cause condensation and lead to possible contamination.

# PRECAUTIONS FOR CULTURES

● **Leave space between culture containers.**
Always leave space for ventilation between culture containers (Petri dishes, flasks, etc.). Inadequate spacing may result in uneven temperature distribution and $CO_2$/$O_2$ gas density.

● **Do not place harmful materials in the chamber.**
Never place samples that release acidic, alkali, or corrosive gas in the chamber. Doing so may cause damage resulting from discoloration or corrosion.

● **Close the inner door.**
Always close the inner door before closing the outer door. Failure to close the inner door will adversely affect performance even if the outer door is closed.

● **Open and close the doors gently.**
Always open and close the doors gently. Closing the doors forcefully may cause spillage of the culture medium, incomplete closing, or damage to the gasket. Before opening the inner door, check through the glass to confirm that the UV lamp is OFF (if the optional UV system set MCO-19UVS is installed).

● **Be careful when closing the outer door.**
Use the handle when closing the outer door. Holding the door in other places may cause injury by getting fingers caught in the door. Do not lean on the outer door. Doing so may result in injury from the outer door coming loose or the incubator falling over, or it may cause current leakage or electric shock.

● **Be careful of the inside of the outer door.**
The inside of the outer door may become hot.

● **Avoid using excessive force on the inner door.**
Do not put your hand on the glass, poke it with sharp objects, or apply strong force. Doing so may result in injury from breaking the glass.

● **Check the cause of any alarm buzzer.**
If an alarm buzzer sounds while the incubator is in use, immediately check the cause of the alarm. For details on what may cause an alarm buzzer to sound, refer to page 37.

# INITIAL CLEANING METHOD

**Before using the incubator for the first time, clean dirt (tape residue, smear, etc.) from the chamber and the inner attachments thoroughly. To keep the chamber clean is essential to get the proper performance out of the incubator. Use the following steps to clean the incubator properly.**

**1.** Remove the inner attachments, referring to "REMOVING INNER ATTACHMENTS" on page 22.

**2.** Clean the removed inner attachments, chamber inside walls and inner door gaskets with a cloth or sponge soaked in neutral detergent, diluted by 5 % or less. (Undiluted detergent can damage the plastic components. For the dilution, refer to the instruction of the detergent.) (Fig. 1)

**⚠CAUTION**

Do not use detergents or antiseptic solutions with acid, alkali, or chlorine. Doing so may cause discoloration, corrosion, or rusting.
Be careful to keep the diluted detergent or water out of the temperature sensor, the $CO_2$ gas injection hole, the gas injection port, the inner sample air access port, the fan motor shaft bearing, and the inner sample air outlet (Fig.2 ⬅ ). Also, do not wash the temperature sensor, the $CO_2$ sensor, the $O_2$ sensor, the water level sensor and UV lamp using detergent. Doing so may cause failure.（Fig.2）

**3.** Soak a cloth or unwoven cloth in distilled water and wring it tightly, and then wipe off the residual detergent thoroughly.

**4.** Wash the silicon caps (2 pcs) for the access port and the inner circulating fan using the above mentioned detergent and rinse them with distilled water, and then autoclave them for sterilization (121 °C, 20 minutes).

**5.** Wipe up the inside walls, and the inner attachments like trays thoroughly with a cloth or unwoven cloth soaked in alcohol for disinfection. Be careful not to leave any residue alcohol.

**6.** Reinstall the inner attachments correctly and securely, referring to "INSTALLING INNER ATTACHMENTS" on page 24.

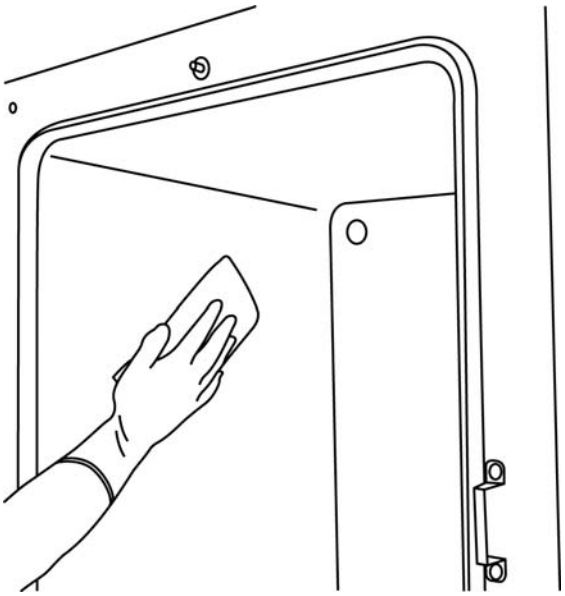

Fig. 1

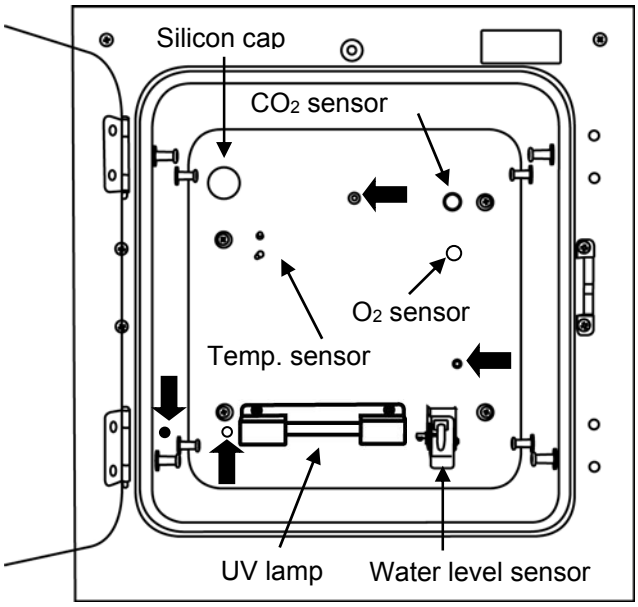


Fig. 2

# REMOVING INNER ATTACHMENTS

**⚠CAUTION**

**Wear rubber gloves when performing maintenance on the chamber.** Failure to wear gloves may result in cuts or abrasions from sharp edges or corners.

Be careful not to damage the water level sensor or the UV lamp in the rear duct. (When an optional UV system set MCO-19UVS is installed.)
Do not use detergents or antiseptic solutions with acid, alkali, or chlorine. Doing so may cause discoloration, corrosion, or rusting.

**1.** Turn OFF the power switch of the incubator.

**2.** Open the outer and inner doors and pull out the trays. (Fig. 1)

**3.** Lift the humidifying pan cover off from the pins at the rear side. (Fig. 2)

**4.** Pull out the humidifying pan. (Fig. 3)

**5.** Remove the screw by securing the clamp for the side support. (Fig. 4)

**6.** Remove the clamp. (Fig. 5)

**7.** Lift the side support off of the pins. (Fig. 6)

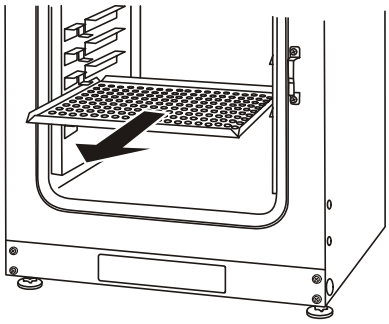

Fig. 1

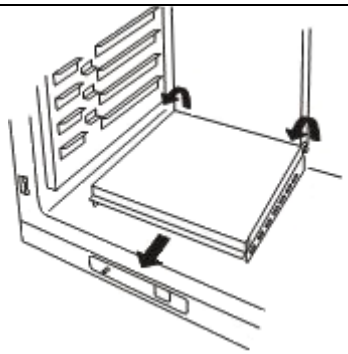

Fig. 2

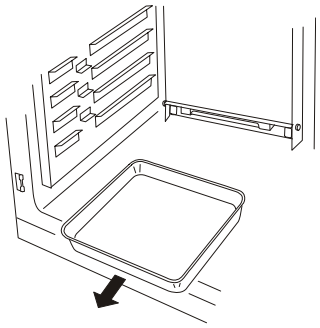

Fig. 3

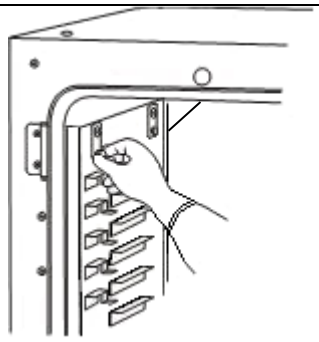

Fig. 4

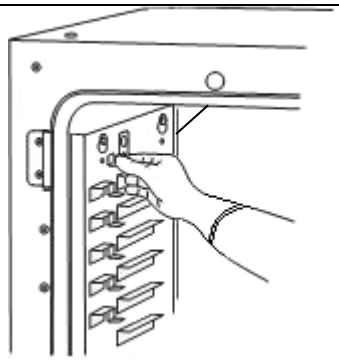

Fig. 5

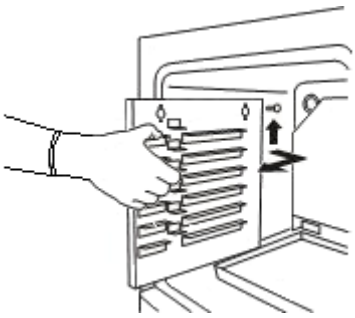

Fig. 6

**8.** Lift the rear duct and remove it from the pins at the rear side. (Fig. 7)

**9.** Remove the fan by pulling out the central spring and then by pulling out the fan. (Fig. 8)

**10.** Remove the silicon caps of the access port, one each from interior (Fig. 9) and exterior (Fig. 10).

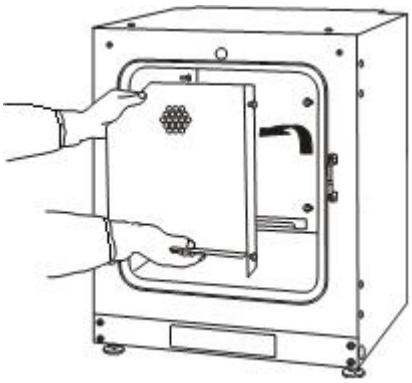

Fig. 7

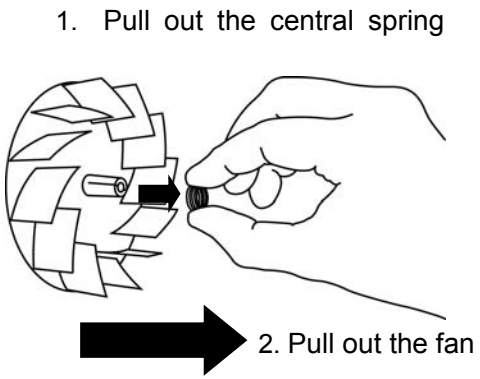


Fig. 8

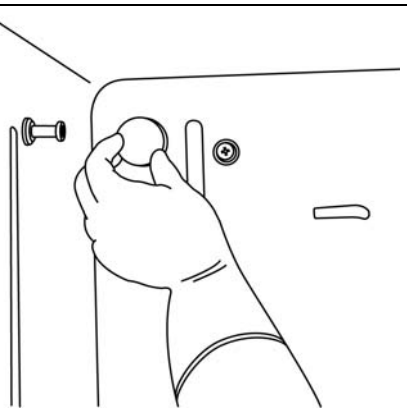

Fig. 9

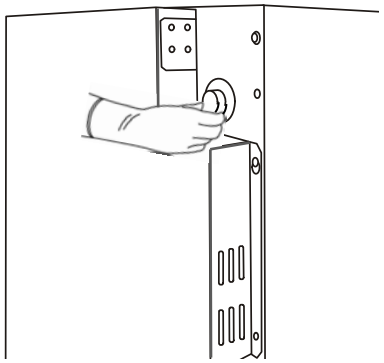

Fig. 10

# INSTALLING INNER ATTACHMENTS

**Use the following steps to install the inner attachments properly.**

**1.** To reinstall all the attachments, perform the procedure in reverse order from step 10 on page 23.

**2.** When installing the fan, insert it to the motor shaft securely. Lightly turn the fan manually to make sure that it does not strike the rear panel. Then put on the central spring. (Fig. 1)

> **⚠CAUTION**
>
> If the fan is not inserted deep enough, the intended velocity performance cannot be achieved, which may cause culture failure or insufficient decontamination.

**3.** To install the rear duct, confirm 4 pins are securely installed in the 4 holes of rear duct. (Fig. 2)

> **⚠CAUTION**
>
> If the rear duct is fixed insecurely, the intended velocity performance cannot be achieved, which may cause culture failure or insufficient decontamination.

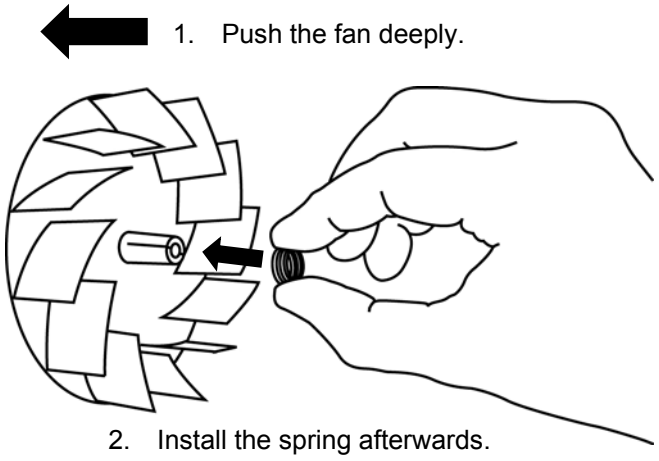


Fig. 1

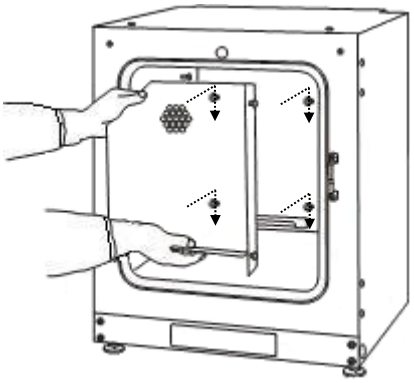

Fig. 2

**4.** To install the side support, confirm the direction of fixing holes as shown in Fig. 3.
**5.** As shown in Fig. 4, set the tray with only the front edge bent up. If the tray is set in the wrong direction, it may not be level and may become unstable.

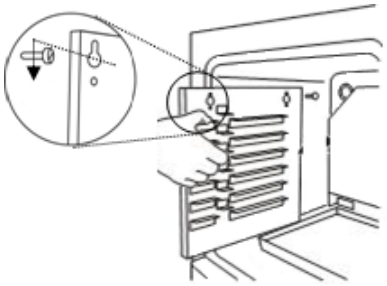

Fig. 3

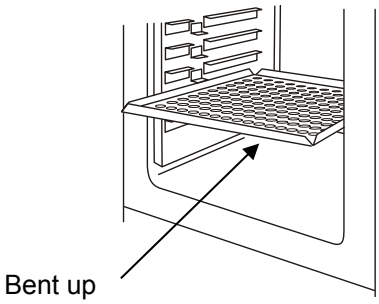


Fig. 4

# FILLING THE HUMIDIFYING PAN

Use the following procedure to fill the humidifying pan or to replace the water.

**1.** Lift the front side of the humidifying pan cover. (Fig. 1)

**2.** Pull the humidifying pan forward. (Fig. 2)

**3.** Dispose of the remaining water in the humidifying pan and clean the humidifying pan with a diluted detergent. Then rinse it thoroughly with distilled water and wipe it with alcohol for disinfection.

**4.** Wipe all moisture from the bottom of the chamber.

**5.** Return the humidifying pan to the chamber and add sterile distilled water (approx. 1.5 L, preheated to 37 °C). (Fig. 3)

**6.** Set the humidifying pan with the inner side flush against the back, and replace the humidifying pan cover. Close inner door and outer door, and confirm that water level alarm lamp (RH PAN) on the control panel is OFF.

**Note:**

• Preheat to 37 °C the water to be added to the humidifying pan. Adding low-temperature water will lower the temperature and humidity in the chamber.

• Replace the water in the humidifying pan by the above procedure when the water level alarm lamp blinks or water in the humidifying pan decreases.

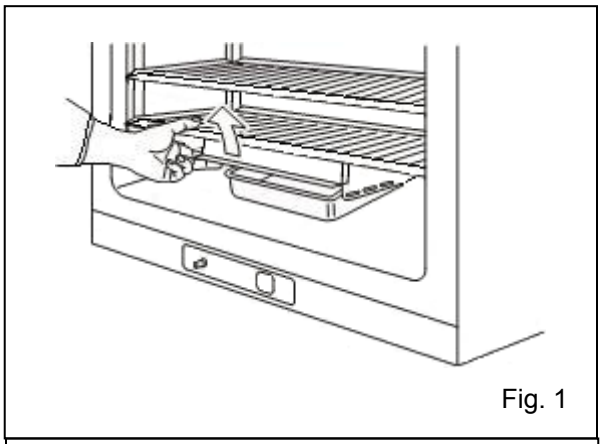

Fig. 1

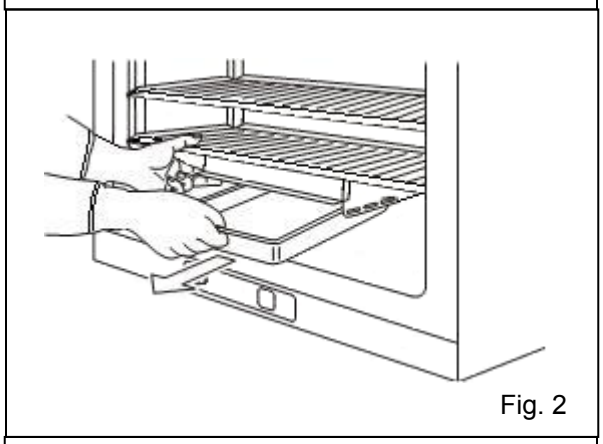

Fig. 2

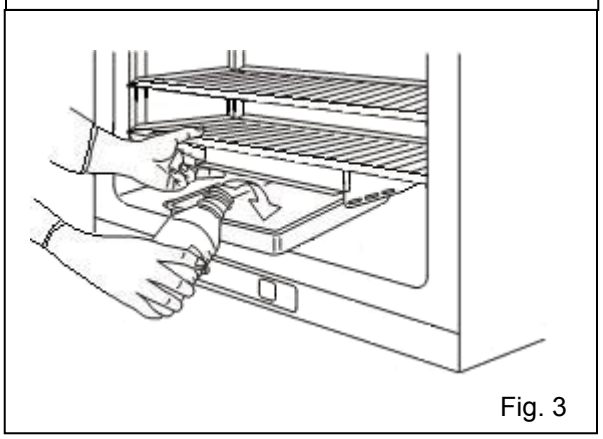

Fig. 3

## ⚠CAUTION

When refilling the water in the humidifying pan, **always wipe off any dirt from the water level sensor with alcohol for disinfection**. While doing that, be careful not to apply excessive force to the sensor lead wire.

**Caution:**

In order to adjust the humidity inside the incubator chamber optimally and prevent condensation on the chamber surface and inner door, it is designed to create the lower temperature area underneath the humidifying pan to recondense the evaporated moisture in the humidifying pan. Although the condensation may be seen round the humidifying pan on the bottom of chamber (inside the humidifying pan cover), it is not a malfunction.

# WATER LEVEL SENSOR

This incubator is equipped with a water level sensor. The water level sensor is set automatically when the humidifying pan is installed. Take care not to damage the water level sensor when removing or installing the humidifying pan.

When the humidifying pan is removed (side view)

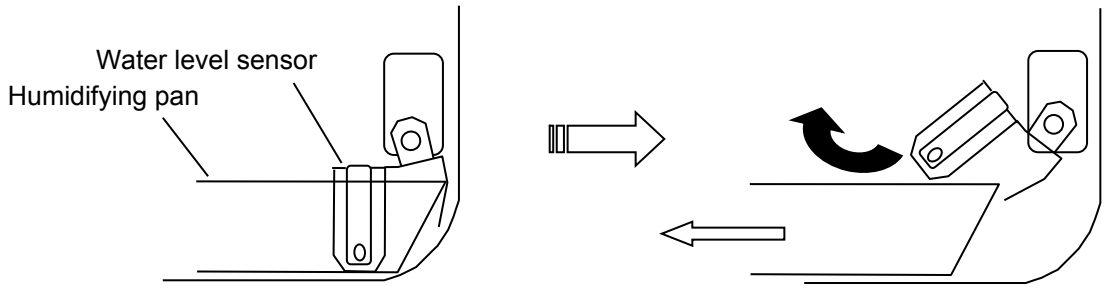


When the humidifying pan is installed (side view)

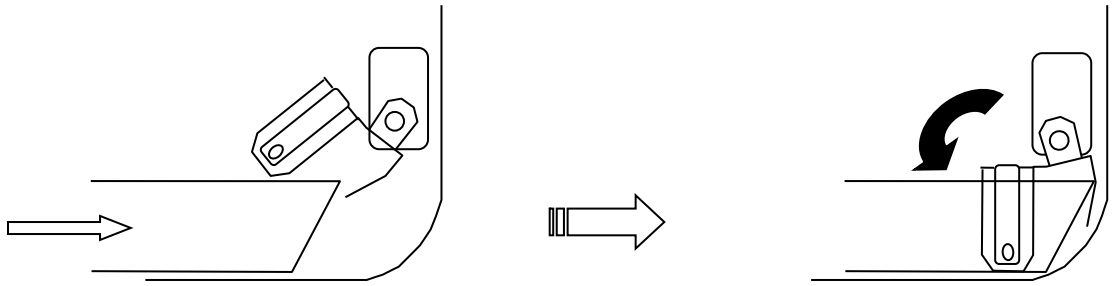

**Note:** Make sure that the humidifying pan is pushed all the way to the back and that the water level sensor comes down when you install the humidifying pan.

**Note:**

• Lift the water level sensor before installing the humidifying pan if the water level sensor is in the lower position after maintenance.

• When installing the humidifying pan, make sure that the humidifying pan is set properly and that water level sensor comes down into the humidifying pan. The water level alarm lamp (RH PAN) blinks if the water level sensor does not come down completely. If necessary, set the humidifying pan again in the proper location.

• The water level sensor detects the water level every 30 minutes and just after the outer door is closed. It takes several seconds to detect the water level. Therefore, the water level alarm lamp may flash a few times after the outer door is closed even when the humidifying pan is full.

## ⚠CAUTION

Foreign particles on the water surface can adhere to the water level sensor and fittings by capillary action because the water level sensor is always in the water. The adhered foreign particles degrade water level sensor performance. Therefore, the water level alarm lamp (RH PAN) may blink even though enough water is in the humidifying pan, or RH PAN lamp may not blink even though enough water is not in it. Be sure to wipe OFF any dirt on the water level sensor with alcohol for disinfection whenever you change the humidifying water. When cleaning the water level sensor, take care not to apply excessive force to the lead wires.

# ROUTINE MAINTENANCE

To use this unit in a clean condition, clean the chamber and the inner attachments at least once a month.

**1.** Remove the inner attachments by the procedures shown on page 22.

**2.** Clean the chamber and the inner attachments by the procedures shown on page 21.

**3.** Install the inner attachments by the procedures shown on page 24.

● When there is excessive dirt, contact our sales representative or agent.

# CORRECT OPERATION

Use the following procedure to start trial operation or actual operation of the incubator.

**1.** Install the incubator correctly, referring to “INSTALLATION” on page 15.

**2.** Remove the packing materials from the chamber and inner attachments. Clean and disinfect the chamber and inner attachments, referring to above “ROUTINE MAINTENANCE”.

**3.** Add approximately 1.5 L of sterile distilled water to the humidifying pan. (Refer to page 25.)

**4.** Connect the power supply removable cord* to the outlet. Turn ON the power switch at the lower part of the incubator.
*For EU user: 2 power supply removable cords are provided.

| For UK | For EU countries other than UK |
|---|---|
| 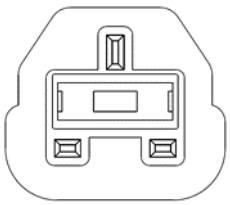 | 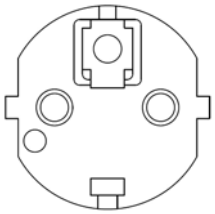 |

**⚠WARNING**

**Always use the power supply removable cord that is provided.** Other power supply cord may cause electric shock or fire.

● **The provided power supply removable cord is only for this product.**
Never use it for any other products.

**Note:**
The humidity in the incubator chamber is adjusted to the optimum setting. To prevent condensation on the surface inside chamber and the inner door, there is a low-temperature area under the humidifying pan in the bottom of chamber to recondense evaporated moisture. Condensation may occur around the humidifying pan at the bottom of the chamber (on the inside of the humidifying pan cover), but this does not indicate a problem.

# OPERATION OF KEYS ON THE CONTROL PANEL

Table below shows the basic procedure for setting the chamber temperature, $CO_2$ and $O_2$ density. The high limit alarm temperature setting is also shown in the table. Perform key operations in the sequence indicated in the table. The example in the table is based on the assumption that the desired temperature is 36.5 °C, $CO_2$ density is 5 % and $O_2$ density is 5 %. Adjustment of the high limit regulator should be executed after the chamber temperature reaches the stable condition.
(The unit is set at the factory so that the chamber temperature is 37 °C, $CO_2$ control is 0 % and $O_2$ density is 20 %.)
Allow at least 8 hours until the next setting after setting of desired chamber temperature and setting $CO_2$ density to 0 %, at the time of first start-up or start-up after no use for long period.

**Basic operation (Example: Chamber temperature; 36.5 °C, $CO_2$ density; 5 % $O_2$ density; 5 %)**

| | Description of operation | Key operated | Indication after operation |
|---|---|---|---|
| 1 | Turn the power switch ON. | ---- | The current chamber temperature is displayed in digital temperature indicator. |
| 2 | Press set key. | SET | The left digit blinks. 37.0 |
| 3 | By pressing digit shift key and numerical value shift key, set the figure to 36.5. | ▶▶ | When pressed, the changeable digit is shifted. |
| | | ▲ | When pressed, the figure of settable digit changes. |
| 4 | Press enter key. | ENT | Set temperature is memorized. Left digit in digital $CO_2$ density indicator blinks. 00.0 |
| 5 | By pressing digit shift key and numerical value shift key, set the figure to 05.0. | ▶▶ | When pressed, the changeable digit is shifted. |
| | | ▲ | When pressed, the figure of settable digit changes. |
| 6 | Press enter key. | ENT | Set $CO_2$ density is memorized, and Left digit in digital $O_2$ density indicator blinks. 20.0 |
| 7 | By pressing digit shift key and numerical value shift key, set the figure to 05.0. | ▲ | When pressed, the figure of settable digit changes. |
| | | ▶▶ | When pressed, the changeable digit is shifted. |
| 8 | Press enter key. | ENT | Set $O_2$ density is memorized. |
| 9 | (Executed after the chamber temperature reaches the stable condition) Adjust high limit regulator so that the alarm temp. is 1 °C or more higher than chamber temperature. | | In digital $CO_2$ density indicator, HI is displayed. In digital temperature indicator, high limit temp. is displayed. The high limit temp. can be changed by turning high limit regulator. |
| 10 | Press enter key. | ENT | This is the end of set mode and the indicators display current temperature and density. |

• In each setting mode, if the change of the setting is not necessary, pressing set key (SET) skips to next setting mode.
• When the $CO_2$ density is set to 00.0 % and $O_2$ density is set between 18.1 % and 21.9 %, the control is OFF regardless of the chamber atmosphere.
• The high limit temperature set value will change when the high limit regulator is turned even if the unit is not in setting mode, because the alarm circuit is an independent circuit.
• In each setting mode, the indicator returns to the current temperature and density display mode automatically when 90 seconds has passed without any key operation.
• The setting of $O_2$ density is 70 % in maximum when the setting of $CO_2$ density is higher than 10.1 %. And, the setting of $CO_2$ density is 10 % in maximum when the setting of $O_2$ density is 70.1 %.
• Always ventilate the chamber when changing to $CO_2$ control only from $O_2$ control.

# SETTING OF ALARM RESUME TIME

The alarm buzzer is silenced by pressing the alarm buzzer stop key (BUZZER) on the control panel during alarm condition.
The buzzer will be activated again after certain suspension if the alarm condition is continued. The suspension time can be set by following the procedure shown in the table below.
The example in the table is based on the assumption that the desired duration is 20 minutes.
**Note:** The duration is set in 30 minutes at the factory.

**Table Changing procedure for alarm resume time (Ex: change from 30 minutes to 20 minutes)**

| | Description of operation | Key operated | Indication after operation |
|---|---|---|---|
| 1 | | ---- | The current chamber temperature is displayed. |
| 2 | Press calibration key for 5 seconds. | CAL | The left digit blinks. |
| 3 | Set the figure to F25 with the numerical value shift key and digit shift key. | ▲ | When pressed, the figure of settable digit changes. |
| | | ▶▶ | The settable digit is shifted. |
| 4 | Press enter key. | ENT | The current setting is displayed. The middle digit blinks. |
| 5 | Set the figure to 020 with the numerical value shift key. | ▲ | When pressed, the figure of settable digit changes. |
| 6 | Press enter key. | ENT | The setting is memorized and the current chamber temperature is displayed. |

- The settable alarm resume time are 0, 10, 20, 30, 40, 50, or 60 minutes (The setting is 000, 010, 020, 030, 040, 050 or 060 respectively). The buzzer would not reset if the reset time is set in 000.
- The set mode returns to the temperature display mode automatically when 90 seconds has passed without any key operation. In this case, any setting before pressing the enter key (ENT) is not memorized.

**⚠WARNING**

**Do not use calibration key (CAL)** on the control panel in normal use. Pressing this key leads the calibration mode. Wrong key operation affects the basic performance. Never touch any other keys on the control panel in the event of pressing calibration key (CAL) accidentally. After about 90 seconds, the unit returns to chamber temperature display mode automatically.

# Operation after power failure

The set value is memorized by nonvolatile memory. Accordingly, the incubator resumes the operation with setting before power failure.

# KEY LOCK FUNCTION

This unit is provided with a key lock function. When the key lock is ON, change of temperature, $CO_2$ or $O_2$ density setting through the key pad is not available.

**Note:** The key lock is set in OFF mode at the factory.

| Display | Mode | Function |
|---|---|---|
| L0 | Key lock is OFF | Enable to change the setting |
| L1 | Key lock is ON | Disable to change the setting |

**Procedure for key lock setting (change from key lock OFF to key lock ON)**

| | Description of operation | Key operated | Indication after operation |
|---|---|---|---|
| 1 | | ---- | The current chamber temperature is displayed. |
| 2 | Press digit shift key for 5 seconds. | ▶▶ | L0 is displayed in the digital temperature indicator. L0 |
| 3 | Press numerical value shift key and scroll the figure to 1. | ▲ | When pressed, the figure of settable digit changes. L1 |
| 4 | Press enter key. | ENT | The key lock is set to ON. The current chamber temperature is displayed. |

**Note:**

• The key lock function is available for temperature, $CO_2$ density and $O_2$ density setting.

• To cancel the key lock, set to L0 in the above procedure.

# AUTOMATIC GAS CYLINDER CHANGEOVER

This incubator is provided with an automatic $N_2$ (or $O_2$) gas cylinder changeover system, which switches the gas ($N_2$ or $O_2$) cylinder when one gas cylinder becomes empty.
Also, a gas auto changer (MCO-5GC) is available as an optional accessory. This kit switches the gas supply line when one $CO_2$ gas cylinder becomes empty.
**Note:** The installation of MCO-5GC should be implemented by a qualified service personnel.

**1.** Indication of gas supply line currently used

| | Lamp ON | Lamp blink with long interval |
|---|---|---|
| $N_2/O_2$ gas supply line indicator | Gas cylinder A | Gas cylinder B |
| $CO_2$ gas supply line indicator | Gas cylinder A (only when MCO-5GC installed) | Gas cylinder B (only when MCO-5GC installed) |

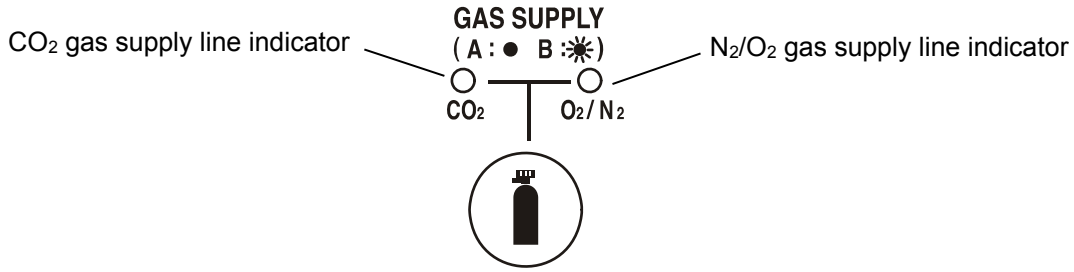


**2.** The $N_2/O_2$ gas supply line switches when there is no change in $O_2$ density for a while even if gas valve is opened. Such status is regarded as the empty gas cylinder.
Similarly, $CO_2$ gas supply line switches when one gas cylinder is empty if MCO-5GC is installed.
The notice of change of gas supply line is as follows:

| | Digital temperature indicator | Digital $CO_2$ density indicator | Digital $O_2$ density indicator |
|---|---|---|---|
| When $N_2$ or $O_2$ gas supply line is switched automatically | Current chamber temperature and E02 is displayed alternately. | Current $CO_2$ density is displayed. | Current $O_2$ density and empty cylinder is displayed alternately “A or B”. |
| When $CO_2$ gas supply line is switched automatically (only when MCO-5GC is installed) | Current chamber temperature and E01 is displayed alternately. | Current $CO_2$ density and empty cylinder is displayed alternately “A or B”. | Current $O_2$ density is displayed. |

• By pressing alarm buzzer stop key (BUZZER), the alarm is canceled and the incubator returns to the normal operation.
• Replace the cylinder A when the gas supply line is switched from cylinder A to cylinder B. Care should be taken to the cylinder since a little gas may remain in the cylinder A.
• The supply line is switched to the cylinder A again when the cylinder B is empty.

**Note:**
The changeover of the gas supply line ($N_2$ or $O_2$ and $CO_2$) is determined based on the recovery of $CO_2$ and $O_2$ density in the chamber. The changeover can be accomplished by some occasions (such as block or press of gas tube, reduction of gas pressure, or insufficient open of gas valve) even if the cylinder is not empty. Check the gas volume remained in the cylinder before replacement.

**3.** Following shows the procedure to changeover the gas supply line ($N_2$/$O_2$ gas cylinder and $CO_2$ gas cylinder) manually.
(Example: Change of $CO_2$ gas cylinder from B to A, Change of $N_2$ gas cylinder from A to B)

| | Operation | Key operated | Indication after operation | Gas supply line indicator | |
|---|---|---|---|---|---|
| | | | | $CO_2$ | $O_2$/$N_2$ |
| 1 | Press set key. | SET | The left digit on the digital temperature indicator blinks. | ☀ | ● |
| 2 | Press enter key. | ENT | The left digit on the digital $CO_2$ density indicator blinks. | ☀ | ● |
| 3 | Press gas supply line switching key once. (Pressing the key again selects $CO_2$ gas cylinder B) | | The blinking $CO_2$ gas supply lamp changes to continuous ON and cylinder A is selected. | ● | ● |
| 4 | Press enter key. | ENT | The setting of $CO_2$ gas cylinder is memorized, and the left digit on the digital $O_2$ density indicator blinks. | ● | ● |
| 5 | Press gas supply line switching key once. (Pressing the key again selects $N_2$ gas cylinder A) | | The lamp ON of $N_2$/$O_2$ gas supply lamp changes to blinking and cylinder B is selected. | ● | ☀ |
| 6 | Press enter key. | ENT | The setting of $N_2$ gas cylinder is memorized. HI is displayed on the digital $CO_2$ density indicator and the setting of high limit alarm temperature is displayed. | ● | ☀ |
| 7 | Press enter key. | ENT | This is the end of the setting mode. The current chamber temperature and densities are displayed. | ● | ☀ |

●: lamp ON ☀: lamp blinks

**Note:**
The procedure 3 above should be skipped when MCO-5GC is not installed.

# UV LAMP

The clauses below are applicable when an optional UV system set MCO-19UVS is installed.

A UV lamp is located inside the rear duct to sterilize the water in the humidifying pan and air circulating in the chamber.
Following shows precautions and instructions about the UV lamp.

• The UV light is exposed only to the inside of the rear duct and the humidifying pan cover when all chamber components are installed properly.

• During cultivation, ensure all components are located adequately and never turn on the UV light without the humidifying pan cover.

• Even if the unit is operating without turning on the UV lamp, the humidifying pan cover should be installed properly. An operation without humidifying pan cover will affect the temperature distribution and humidify recovery.

• When checking the UV lamp operation, open the outer door and push the door switch with the inner door closed. The visible blue light can be checked under the humidifying pan cover. The UV light is harmful to eyes. Never turn on the UV light with the inner door or humidifying pan cover opened.

• The UV lamp is ON for a predetermined period after the outer door is closed, or every 12 hours when the outer door is not opened more than 12 hours continuously. The period of factory setting is 5 minutes. The period can be changed when necessary as shown in the page 34.

• The recommended timing of lamp replacement (the ratio of UV output is less than 70% of initial value) is when the accumulated ON time is over about 1,000 hours. The blink of the UV indicator when the UV lamp is OFF means the accumulated time has exceeded about 1,000 hours and recommends the replacement of the lamp. When replacing the UV lamp, contact our sales representative or agent.

• E18 is displayed on the digital temperature indicator when the UV lamp is burned out. In this case, replace the UV lamp immediately. At the time of replacement, also replace the glow starter (Type; FG-7P). For the replacement of UV lamp and glow starter, contact our sales representative or agent.

# Change of setting for UV lamp ON period

The clauses below are applicable when an optional UV system set MCO-19UVS is installed.

Follow the procedure below when changing the setting for UV lamp ON period.

**Basic operation sequence (Example: change of UV lamp ON period from 5 minutes to 3 minutes)**

| | Description of operation | Key operated | Indication after operation |
|---|---|---|---|
| 1 | Press calibration key for 5 seconds. | CAL | The left digit in the digital temperature indicator blinks. 37.0 |
| 2 | By pressing numerical value shift key and digit shift key, set the figure to F01. | ▲ | When pressed, the figure of settable digit changes. |
| | | ▶▶ | When pressed, the changeable digit is shifted. |
| 3 | Press enter key. | ENT | The current setting is displayed in the digital $CO_2$ density indicator. 005 |
| 4 | By pressing numerical value shift key, set the figure to 003. | ▲ | When pressed, the figure of settable digit changes. |
| 5 | Press enter key. | ENT | Set value is memorized and the display return to normal display mode. |

• The available set range for the UV lamp is between 0 minute and 30 minutes (000 to 030). The default setting is for 5 minutes. When set to 000, the UV lamp is not turned on.
• The UV lamp is turned off during ON period when the outer door is opened. After closing the outer door, the lamp turns on during predetermined period.
• Condensation will occur and/or temperature distribution may be affected due to the heat of the UV lamp when the setting of the lamp operation is longer than 5 minutes or if only the outer door is opened repeatedly.
• For the replacement of UV lamp, contact our sales representative or agent.

Pressing calibration key (CAL) for about 5 seconds leads the calibration mode. In the calibration mode, the calibration of temperature, $CO_2$ density and $O_2$ density is possible. Wrong key operation affects the basic performance. Never touch any other keys on the control panel in the event of pressing calibration key (CAL) accidentally. After about 90 seconds, the unit returns to chamber temperature display mode automatically.

# Precautions when using the UV lamp

The cautions below are applicable when an optional UV system set MCO-19UVS is installed.

**● Always use humidifying pan and humidifying pan cover**

The humidifying pan and humidifying pan cover prevent the UV light from escaping. Make sure they are installed even if you do not need humidity.

**● Notice of recommended replacement of UV lamp**

This unit is provided with a function to notify the recommendation of UV lamp replacement when the accumulated ON time of UV lamp is over about 1,000 hours. The blink of the UV indicator on the control panel recommends the replacement of UV lamp. For the replacement, contact our sales representative or agent.

**● Location of UV lamp**

The UV lamp is OFF when the outer door is opened as it is operated to outer door switch. Check the UV lamp is ON with the inner door closed once a month by activating the outer door switch. If the lamp is not ON, the lamp needs to be replaced. Contact our sales representative or agent.

The UV lamp is located in the rear duct. Take care not to damage the lamp at the time of installation/removal of attachments or humidifying pan.

**⚠WARNING**

**Never expose the eyes directly to UV light** as UV light can cause permanent damage to eyes. Never remove humidifying pan cover when UV light is ON (When an optional UV system set MCO-19UVS is installed).

**Hazardous UV light.** Do not press door switch.

# Lighting the UV lamp for 24 hours

Follow the procedure below when lighting UV lamp for 24 hours.
Before sterilization by UV lamp, remove all attachments in the chamber (tray, side support, rear duct, fan, humidifying pan, humidifying pan cover, gas injection nozzle, gas injection nozzle tube) and clean the interior, inner door and UV lamp thoroughly.

| | Description of operation | Key operated | Indication after operation |
|---|---|---|---|
| 1 | Press calibration key for 5 seconds. | CAL | The left digit in the digital temperature indicator blinks. 37.0 |
| 2 | By pressing numerical value shift key and digit shift key, set the figure to F02. | ▲ | When pressed, the figure of settable digit changes. |
| | | ▶▶ | When pressed, the changeable digit is shifted. F02 |
| 3 | Press enter key. | ENT | "000" is displayed in the digital $CO_2$ density indicator. (unit: min) 000 |
| 4 | By pressing numerical value shift key, set the figure to 001. | ▲ | When pressed, the figure of settable digit changes. 001 |
| 5 | Press enter key. | ENT | Set value is memorized and the display returns to normal display mode. |

● This setting should be executed with the outer door closed and the UV lamp off.
● The UV lamp keeps on for 24 hours after the setting. The setting is canceled when the outer door is opened. Follow the above procedure to set the UV 24-hour mode again.
● The unit keeps running with set temperature, $CO_2$ density and $O_2$ density during UV lighting.

Pressing calibration key (CAL) for about 5 seconds leads the calibration mode. In the calibration mode, the calibration of temperature, $CO_2$ density and $O_2$ density is possible. Wrong key operation affects the basic performance. After about 90 seconds, the unit returns to chamber temperature display mode automatically. In this case, the set value that has not been fixed pushing enter key (ENT) is not changed.

# ALARMS, SAFETY AND SELF-DIAGNOSIS

This unit has the alarms and safety functions shown in table below, and also self diagnostic functions.

**Alarms and safety functions**

| Alarm & Safety | Situation | Indication | Buzzer | Safety operation |
|---|---|---|---|---|
| High limit temperature alarm | If the chamber temperature exceeds the high limit alarm temperature set value. | Over heat lamp lights. E12 or E16 and chamber temperature are displayed alternately. | Continuous tone | Heater OFF<br>Remote alarm |
| Automatic set temperature alarm | If the chamber temperature deviates from the set temperature by ±1 °C or more. | All digits on the digital temperature indicator blink. | Intermittent tone with 15 minutes delay. | Remote alarm with 15 minutes delay |
| Automatic set $CO_2$ density alarm | If the chamber $CO_2$ density deviates from the set value by ±1 % or more. | All digits on the digital $CO_2$ density indicator blink. | Intermittent tone with 15 minutes delay. | Remote alarm with 15 minutes delay |
| Automatic set $O_2$ density alarm | If the chamber $O_2$ density deviates from the set value by ±1 % or more. | All digits on the digital $O_2$ density indicator blink. | Intermittent tone with 30 minutes delay. | Remote alarm with 30 minutes delay |
| Auto-return | When there is no key pressing in each setting mode for 90 seconds. | Normal display mode. | ----- | The setting mode is canceled. |
| Key lock | When the key lock is “ON”. | ----- | ----- | The setting is disabled. |
| $CO_2$ gas cylinder empty | If the $CO_2$ density does not increase when the $CO_2$ gas valve is opened. | E01 is displayed alternately with the temperature on the digital temperature indicator. | Intermittent tone | Remote alarm |
| $N_2/O_2$ gas cylinder empty | If the $O_2$ density does not change when the $N_2/O_2$ gas valve is opened. | E02 is displayed alternately with the temperature on the digital temperature indicator. | Intermittent tone | Remote alarm<br>$N_2/O_2$ gas supply line is altered |
| $CO_2$ gas line changeover | When the $CO_2$ gas supply line is switched.<br>(only when MCO-5GC is installed) | E01 is displayed alternately with the temperature on the digital temperature indicator. The empty gas supply line is displayed on the digital $CO_2$ density indicator. | Intermittent tone | Remote alarm<br>Gas supply line is altered. |
| $O_2/N_2$ gas line changeover | When the $O_2/N_2$ gas supply line is switched. | E02 is displayed alternately with the temperature on the digital temperature indicator. The empty gas supply line is displayed on the digital $O_2$ density indicator. | Intermittent tone | Remote alarm<br>Gas supply line is altered. |
| Wrong $CO_2$ gas line connection | If the $CO_2$ gas is connected to wrong gas supply line. | E03 is displayed alternately with the temperature on the digital temperature indicator. | Intermittent tone | Remote alarm<br>$N_2/O_2$ valve and $CO_2$ valve are closed. |
| Wrong selection of gas between $N_2$ and $O_2$ | If the $N_2$ gas or $O_2$ gas is selected wrongly. | E04 is displayed alternately with the temperature on the digital temperature indicator. | Intermittent tone | Remote alarm<br>$N_2/O_2$ valve and $CO_2$ valve are closed. |
| Chamber temperature sensor abnormality | If the temperature sensor is disconnected. | E05 is displayed alternately with the temperature on the digital temperature indicator. | Intermittent tone | Heater OFF<br>Remote alarm |
| | If the temperature sensor is short circuited. | E06 is displayed alternately with the temperature on the digital temperature indicator. | | |

# ALARMS, SAFETY AND SELF-DIAGNOSIS

**Alarms and safety functions**

| Alarm & Safety | Situation | Indication | Buzzer | Safety operation |
|---|---|---|---|---|
| Ambient temperature sensor abnormality | If the ambient temperature sensor is disconnected. | E09 is displayed alternately with the temperature on the digital temperature indicator. | Intermittent tone | Remote alarm |
| | If the ambient temperature sensor is short circuited. | E10 is displayed alternately with the temperature on the digital temperature indicator. | | |
| $CO_2$ sensor abnormality | If the output voltage of the $CO_2$ sensor is abnormal. | E11 is displayed alternately with the temperature on the digital temperature indicator. | Intermittent tone | $CO_2$ valve closes. Remote alarm |
| $O_2$ sensor abnormality | If the output voltage of the $O_2$ sensor is abnormal. | E19 is displayed alternately with the temperature on the digital temperature indicator. | Intermittent tone | $N_2/O_2$ valve closes. Remote alarm |
| Main heater abnormality | If the high limit alarm temperature alarm operates, or if the main heater is open circuit, or the main heater relay is short circuited. | E12 is displayed alternately with the temperature on the digital temperature indicator. | Intermittent tone | Remote alarm |
| Bottom heater abnormality | If the bottom heater goes open circuit, or the bottom heater relay is short circuited. | E13 is displayed alternately with the temperature on the digital temperature indicator. | Intermittent tone | Remote alarm |
| Door heater abnormality | If the door heater goes open circuit, or the door heater relay is short circuited. | E14 is displayed alternately with the temperature on the digital temperature indicator. | Intermittent tone | Remote alarm |
| Disconnection of S.S.R for each heater | If the relay of main heater, bottom heater or sensor box heater goes open circuit. | E16 is displayed alternately with the temperature on the digital temperature indicator. | Intermittent tone | Remote alarm |
| Low humidifying water | If the water in the humidifying pan is about 0.8 L. | Water level alarm lamp (RH PAN) blinks. | ----- | ----- |
| UV lamp failure | [When MCO-19UVS is installed] When the UV lamp is burned out. | E18 is displayed alternately with the temperature on the digital temperature indicator. | Intermittent tone | Remote alarm |
| Recommendation of new UV lamp | [When MCO-19UVS is installed] The accumulated ON time is over about 1,000 hours. | UV indicator blinks when UV lamp is OFF. | ----- | ----- |

• The alarm can be canceled by pressing the alarm buzzer stop key (BUZZER), but the remote alarm cannot be silenced. And the high limit temperature alarm cannot be silenced with the alarm buzzer stop key (BUZZER).

• E01 or E02 is cleared automatically when the gas is connected correctly and the buzzer is silenced with the alarm buzzer stop key (BUZZER). Press the alarm buzzer stop key (BUZZER) to silence the alarm after changeover of gas supply line.

• If one of E05 to E18 is displayed, consult with our sales representative or agent.

# CALIBRATION

## Temperature calibration

**1.** Press the calibration key (CAL) for approximately 5 seconds.
**2.** The left digit of the digital temperature indicator blinks, and the other indicators go out.
**3.** Set the present correct temperature with the digit shift key ( ▶▶ ) and numerical value shift key ( ⏶ ), then press the enter key (ENT).
**4.** The unit automatically reverts to the display mode.

[Example]
If the displayed chamber temperature is 37.0 °C (set value) and the actual temperature is 36.8 °C.
**1.** Press the calibration key (CAL) for about 5 seconds.
**2.** The “3” on the digital temperature indicator blinks, and the other indicators go out.
**3.** Adjust the set value to the actual value of 36.8 °C with the digit shift key ( ▶▶ ) and numerical value shift key ( ⏶ ), then press enter key (ENT).
**4.** The unit automatically reverts to the display mode.

**Note:**
It is important to accurately measure the temperature inside the unit when performing temperature calibration. Particularly, the temperature gauge used must have an accuracy of 0.5 class or better. The temperature must be measured at several points.
The temperature setting must not change by more than ±1.0 °C during calibration. If it exceeds this, an error tone is emitted, the input data is ignored, and the unit reverts to the display mode. Consequently, if it is necessary to change the temperature by more than 1.0 °C, perform calibration in several stages over a period of time.

## $O_2$ calibration

[Zero setting]
Zero setting should be done when $CO_2$ and $O_2/N_2$ has not been injected yet and the stable condition (about 8 hours) of temperature/humidity inside the unit has been attained.
**1.** Press the calibration key (CAL) for 5 seconds.
**2.** The left digit on the digital temperature indicator blinks, and the other indicators go out.
**3.** Press the calibration key (CAL) once again.
**4.** The left digit on the digital $CO_2$ density indicator blinks, and the other indicators go out.
**5.** Press the calibration key (CAL) once again.
**6.** The left digit of the digital $O_2$ density indicator blinks, and the other indicators go out.
**7.** Set 20.0 with the digit shift key ( ▶▶ ) and numerical value shift key ( ⏫ ), then press the enter key (ENT).
**8.** The unit automatically reverts to the display mode.

[Span setting]
Span setting should be done under stable condition of temperature, humidity, $CO_2$ and $O_2$ density.
**1.** Press the calibration key (CAL) for about 5 seconds.
**2.** The left digit of the digital temperature indicator blinks, and the other indicators go out.
**3.** Press the calibration key (CAL) once again.
**4.** The left digit of the digital $CO_2$ density indicator blinks, and the other indicators go out.
**5.** Press the calibration key (CAL) once again.
**6.** The left digit of the digital $O_2$ density indicator blinks, and the other indicators go out.
**7.** Set the present correct $O_2$ density with the digit shift key ( ▶▶ ) and numerical value shift key ( ⏫ ), then press the enter key (ENT).
**8.** The unit will automatically revert to the display mode.

[Example]
For the internal $O_2$ density of 5.0 % (setting) and a measured value is 4.8 %.
**1.** Press the calibration key (CAL) for about 5 seconds.
**2.** The left digit on the digital temperature indicator blinks, and the other indicators go out.
**3.** Press the calibration key (CAL) once again.
**4.** The left digit on the digital $CO_2$ density indicator blinks, and the other indicators go out.
**5.** Press the calibration key (CAL) once again.
**6.** The left digit of the digital $O_2$ density indicator blinks, and the other indicators go out.
**7.** Set the present correct $O_2$ density (4.8 %) with the digit shift key ( ▶▶ ) and numerical value shift key ( ⏫ ), then press the enter key (ENT).
**8.** The unit automatically reverts to the display mode.

**Note:**
•The calibration is applicable when the set value and present value are less than 15 % or more than 25 % $O_2$ density.
•The separate calibration is needed as the low density (less than 15 %) and high density (more than 25 %) has the span calibrating value respectively.
•Always carry out the $CO_2$ calibration after $O_2$ calibrating ( [ZERO],[SPAN] ).

# $CO_2$ calibration

[Zero setting]

Zero setting should be done when $CO_2$ and $O_2/N_2$ has not been injected yet and the stable condition (about 8 hours) of temperature/humidity inside the unit has been attained.

**1.** Press the calibration key (CAL) for 5 seconds.
**2.** The left digit on the digital temperature indicator blinks, and the other indicators go out.
**3.** Press the calibration key (CAL) once again.
**4.** The left digit on the digital $CO_2$ density indicator blinks, and the other indicators go out.
**5.** Set 00.0 with the digit shift key ( ▶▶ ) and numerical value shift key ( ⏫ ), then press the enter key (ENT).
**6.** The unit automatically reverts to the display mode.

[Span setting]

Span setting should be done under stable condition of temperature, humidity, and $CO_2$ density.

**1.** Press the calibration key (CAL) for about 5 seconds.
**2.** The left digit on the digital temperature indicator blinks, and the other indicators go out.
**3.** Press the calibration key (CAL) once again.
**4.** The left digit on the digital $CO_2$ density indicator blinks, and the other indicators go out.
**5.** Set the present correct $CO_2$ density with the digit shift key ( ▶▶ ) and numerical value shift key ( ⏫ ), then press the enter key (ENT).
**6.** The unit automatically reverts to the display mode.

**Note:**

This calibration is available when the present correct $CO_2$ density is 2 % or more.

[Example]

For an internal $CO_2$ density of 5.0 % (setting) and a measured value of 4.5 %.

**1.** Press the calibration key (CAL) for about 5 seconds.
**2.** The left digit on the digital temperature indicator blinks, and the other indicators go out.
**3.** Press the calibration key (CAL) once again.
**4.** The left digit on the digital $CO_2$ density indicator blinks, and the other indicators go out.
**5.** Set the present correct $CO_2$ density (4.5 %) with the digit shift key ( ▶▶ ) and numerical value shift key ( ⏫ ), then press the enter key (ENT).
**6.** The unit automatically reverts to the display mode.

# TROUBLESHOOTING

If the unit malfunctions, check out the following before calling for service.

| Malfunction | Check/Remedy |
|---|---|
| The unit does not operate at all | • The unit is not plugged correctly into a power outlet.<br>• The circuit breaker at the power source is active or a power failure has occurred.<br>• The power supply removable cord is connected to the port attached on the rear of the cabinet. |
| The key operation is disabled | • The key lock function is set in ON mode. |
| If the alarm function operates | [At the beginning of operation]<br>• The chamber temperature is not equal to the set value.<br>• The chamber $CO_2/O_2$ density is not equal to the set value.<br>a. The secondary pressure of the gas regulator is not equal to the set value [for $CO_2$ gas; 0.03 MPa(G) (0.3 kgf/cm$^2$(G), 4.4 psi(G)), for $N_2/O_2$ gas; 0.05 MPa(G) (0.5 kgf/cm$^2$(G), 7.3 psi(G))].<br>b. The gas tube is not connected securely between the gas regulator and the unit.<br>[During operation]<br>• The high limit alarm temperature is not set at least 1 $^{o}$C higher than the set chamber temperature.<br>• The set temperature value was changed, or the door was left open for a long period. Or a low temperature load was placed inside the unit. In this case, if the unit is left as it is, the alarm will eventually clear itself.<br>• The gas tube has slipped off or the gas leaks.<br>• The set value of the gas density was changed.<br>• The gas cylinder is empty. Check the primary pressure of the gas cylinder once a week. (The $CO_2$ primary pressure of less than 3.8 MPa(G) (38 kgf/cm$^2$(G), 551 psi(G)) means a little gas in the cylinder. Replace the cylinder soon.) |
| If the chamber temperature is not equal to the set temperature | • The ambient temperature must always be at least 5 $^{o}$C less than the set temperature.<br>• The outer door was closed while the inner door was left open. |
| If the gas density does not coincide with the set value | • The secondary pressure is not set to the specified value [for $CO_2$ gas; 0.03 MPa(G) (0.3 kgf/cm$^2$(G), 4.4 psi(G)), for $N_2/O_2$ gas; 0.05 MPa(G) (0.5 kgf/cm$^2$(G), 7.3 psi(G))].<br>• The gas tube is clogged or chinked.<br>• The humidifying pan is not filled with sterile distilled water. (Always use sterile distilled water.) |
| If the chamber humidity does not rise | • The humidifying pan is not filled with sterile distilled water. (Always use sterile distilled water.) |
| If the gas consumption is too much | • The door is opened frequently.<br>• There is any gas leakage at the connection or pin hole on the gas tube. It is recommended to replace the gas tube once a year.<br>• The gasket of the inner door is not completely sealed.<br>• The access port at the upper left corner is opened. |

| Malfunction | Check/Remedy |
|---|---|
| If normal cultivation cannot be done and chamber gas density is suspect | • The environment around the unit is not normal. The source of the contaminated gas is nearby.<br>• The unit is installed in an enclosed space. |
| If it takes much time to recover the gas density | • HEPA filter is provided in the gas piping. If it takes much time to recover the gas density even though the gas pressure is normal, it may be that dust on the HEPA filter prevents the gas flow. Consult the our sales representative or agent. |

**Note:**

If the malfunction is not eliminated after checking the above items, or the malfunction is not shown in the above table, contact our sales representative or agent.

# DISPOSING OF THE $O_2/CO_2$ INCUBATOR

When disposing of the $O_2/CO_2$ incubator, contact our sales representative or agent.

**⚠WARNING**

**The $O_2/CO_2$ incubator must be dismantled and disposed of by qualified personnel only**. If the incubator is left where outsiders enter, it may result unexpected accident (for example, children to become locked inside).

Before disposing a $O_2/CO_2$ incubator with biohazardous danger, decontaminate the $O_2/CO_2$ incubator to the extent possible by the user.

**Note:**
**This symbol mark and recycle system apply <u>only to EU countries</u>. They do not applied to the countries in other areas of the world.**

**(English)**

## Information on Disposal for Users of Waste Electrical & Electronic Equipment (private households)

This symbol on the products and/or accompanying documents means that used electrical and electronic products should not be mixed with general household waste.
For proper treatment, recovery and recycling, please take these products to designated collection points, where they will be accepted on a free of charge basis. Alternatively, in some countries you may be able to return your products to your local retailer upon the purchase of an equivalent new product.
Disposing of this product correctly will help to save valuable resources and prevent any potential negative effects on human health and the environment which could otherwise arise from inappropriate waste handling. Please contact your local authority for further details of your nearest designated collection point.
Penalties may be applicable for incorrect disposal of this waste, in accordance with national legislation.

### For business users in the European Union

If you wish to discard electrical and electronic equipment, please contact your dealer or supplier for further information.

### Information on Disposal in other Countries outside the European Union

This symbol is only valid in the European Union.
If you wish to discard this product, please contact your local authorities or dealer and ask for the correct method of disposal.

**(German)**

## Benutzerinformationen zur Entsorgung von elektrischen und elektronischen Geräten (private Haushalte)

Dieses Symbol auf Produkten und/oder begleitenden Dokumenten bedeutet, dass verbrauchte elektrische und elektronische Produkte nicht mit gewöhnlichem Haushaltsabfall vermischt werden sollen.
Bringen Sie zur ordnungsgemäßen Behandlung, Rückgewinnung und Recycling diese Produkte zu den entsprechenden Sammelstellen, wo sie ohne Gebühren entgegengenommen werden. In einigen Ländern kann es auch möglich sein, diese Produkte beim Kauf eines entsprechenden neuen Produkts bei Ihrem örtlichen Einzelhändler abzugeben.
Die ordnungsgemäße Entsorgung dieses Produkts dient dem Umweltschutz und verhindert mögliche schädliche Auswirkungen auf Mensch und Umgebung, die aus einer unsachgemäßen Handhabung von Abfall entstehen können. Genauere Informationen zur nächstgelegenen Sammelstelle erhalten Sie bei Ihrer Gemeindeverwaltung.
In Übereinstimmung mit der Landesgesetzgebung können für die unsachgemäße Entsorgung dieser Art von Abfall Strafgebühren erhoben werden.

### Für Geschäftskunden in der Europäischen Union

Bitte treten Sie mit Ihrem Händler oder Lieferanten in Kontakt, wenn Sie elektrische und elektronische Geräte entsorgen möchten. Er hält weitere Informationen für sie bereit.

### Informationen zur Entsorgung in anderen Ländern außerhalb der Europäischen Union

Dieses Symbol ist nur in der Europäischen Union gültig.
Bitte treten Sie mit Ihrer Gemeindeverwaltung oder Ihrem Händler in Kontakt, wenn Sie dieses Produkt entsorgen möchten, und fragen Sie nach einer Entsorgungsmöglichkeit.

# DISPOSING OF THE $O_2$/$CO_2$ INCUBATOR

**(French)**

**Informations relatives à l'évacuation des déchets, destinées aux utilisateurs d'appareils électriques et électroniques (appareils ménagers domestiques)**

Lorsque ce symbole figure sur les produits et/ou les documents qui les accompagnent, cela signifie que les appareils électriques et électroniques ne doivent pas être jetés avec les ordures ménagères.
Pour que ces produits subissent un traitement, une récupération et un recyclage appropriés, envoyez-les dans les points de collecte désignés, où ils peuvent être déposés gratuitement. Dans certains pays, il est possible de renvoyer les produits au revendeur local en cas d'achat d'un produit équivalent.
En éliminant correctement ce produit, vous contribuerez à la conservation des ressources vitales et à la prévention des éventuels effets négatifs sur l'environnement et la santé humaine qui pourraient survenir dans le cas contraire.
Afin de connaître le point de collecte le plus proche, veuillez contacter vos autorités locales.
Des sanctions peuvent être appliquées en cas d'élimination incorrecte de ces déchets, conformément à la législation nationale.

### Utilisateurs professionnels de l'Union européenne

Pour en savoir plus sur l'élimination des appareils électriques et électroniques, contactez votre revendeur ou fournisseur.

### Informations sur l'évacuation des déchets dans les pays ne faisant pas partie de l'Union européenne

Ce symbole n'est reconnu que dans l'Union européenne.
Pour vous débarrasser de ce produit, veuillez contacter les autorités locales ou votre revendeur afin de connaître la procédure d'élimination à suivre.

**(Spanish)**

**Información sobre la eliminación para los usuarios de equipos eléctricos y electrónicos usados (particulares)**

La aparición de este símbolo en un producto y/o en la documentación adjunta indica que los productos eléctricos y electrónicos usados no deben mezclarse con la basura doméstica general.
Para que estos productos se sometan a un proceso adecuado de tratamiento, recuperación y reciclaje, llévelos a los puntos de recogida designados, donde los admitirán sin coste alguno. En algunos países existe también la posibilidad de devolver los productos a su minorista local al comprar un producto nuevo equivalente.
Si desecha el producto correctamente, estará contribuyendo a preservar valiosos recursos y a evitar cualquier posible efecto negativo en la salud de las personas y en el medio ambiente que pudiera producirse debido al tratamiento inadecuado de desechos. Póngase en contacto con su autoridad local para que le informen detalladamente sobre el punto de recogida designado más cercano.
De acuerdo con la legislación nacional, podrían aplicarse multas por la eliminación incorrecta de estos desechos.

### Para empresas de la Unión Europea

Si desea desechar equipos eléctricos y electrónicos, póngase en contacto con su distribuidor o proveedor para que le informe detalladamente.

### Información sobre la eliminación en otros países no pertenecientes a la Unión Europea

Este símbolo sólo es válido en la Unión Europea.
Si desea desechar este producto, póngase en contacto con las autoridades locales o con su distribuidor para que le informen sobre el método correcto de eliminación.

**(Portuguese)**

## Informações sobre a eliminação de resíduos para utilizadores de equipamentos eléctricos e electrónicos (utilizadores particulares)

Este símbolo nos produtos e/ou documentos anexos significa que os produtos eléctricos e electrónicos usados não devem ser misturados com os resíduos urbanos indiferenciados.
Para efectuar um tratamento, recuperação e reciclagem correctos, leve estes produtos para pontos de recolha próprios para o efeito, onde serão aceites gratuitamente. Em alternativa, em alguns países, poderá devolver os produtos ao seu revendedor local, aquando da compra de um produto novo equivalente.
A eliminação correcta deste produto ajudará a poupar recursos valiosos e evitar quaisquer potenciais efeitos negativos na saúde humana e no ambiente, que poderiam resultar de um tratamento incorrecto de resíduos. Contacte as autoridades locais para obter mais informações sobre o ponto de recolha mais perto de si.
Poderão ser aplicadas multas pela eliminação incorrecta deste resíduo, de acordo com as leis locais.

### Para utilizadores não particulares na União Europeia

Se pretender eliminar equipamento eléctrico e electrónico, contacte o seu revendedor ou fornecedor para obter mais informações.

### Informações sobre a eliminação noutros países fora da União Europeia

Este símbolo apenas é válido na União Europeia.
Se pretender eliminar este produto, contacte as suas autoridades locais ou revendedor e peça informações sobre o método de eliminação correcto.

**(Italian)**

## Informazioni per gli utenti sullo smaltimento di apparecchiature elettriche ed elettroniche obsolete (per i nuclei familiari privati)

Questo simbolo sui prodotti e/o sulla documentazione di accompagnamento significa che i prodotti elettrici ed elettronici usati non devono essere mescolati con i rifiuti domestici generici.
Per un corretto trattamento, recupero e riciclaggio, portare questi prodotti ai punti di raccolta designati, dove verranno accettati gratuitamente. In alternativa, in alcune nazioni potrebbe essere possibile restituire i prodotti al rivenditore locale, al momento dell'acquisto di un nuovo prodotto equivalente.
Uno smaltimento corretto di questo prodotto contribuirà a far risparmiare preziose risorse ed evitare potenziali effetti negativi sulla salute umana e sull'ambiente, che potrebbero derivare, altrimenti, da uno smaltimento inappropriato. Per ulteriori dettagli, contattare la propria autorità locale o il punto di raccolta designato più vicino.
In caso di smaltimento errato di questo materiale di scarto, potrebbero venire applicate delle penali, in base alle leggi nazionali.

### Per gli utenti aziendali nell'Unione Europea

Qualora si desideri smaltire apparecchiature elettriche ed elettroniche, contattare il rivenditore o il fornitore per ulteriori informazioni.

### Informazioni sullo smaltimento in nazioni al di fuori dell'Unione Europea

Questo simbolo è valido solo nell'Unione Europea.
Qualora si desideri smaltire questo prodotto, contattare le autorità locali o il rivenditore e chiedere informazioni sul metodo corretto di smaltimento.

# DISPOSING OF THE $O_2$/$CO_2$ INCUBATOR

**(Dutch)**

## Informatie over het weggooien van elektrische en elektronische apparatuur (particulieren)

Dit symbool betekent in Europa dat gebruikte elektrische en elektronische producten niet bij het normale huishoudelijke afval mogen.
Lever deze producten in bij de aangewezen inzamelingspunten, waar ze gratis worden geaccepteerd en op de juiste manier worden verwerkt, teruggewonnen en hergebruikt. In Nederland kunt u uw producten bij uw winkelier inleveren bij de aanschaf van een vergelijkbaar nieuw product.
Wanneer u dit product op de juiste manier als afval inlevert, spaart u waardevolle hulpbronnen en voorkomt u potentiële negatieve gevolgen voor de volksgezondheid en het milieu, die anders kunnen ontstaan door een onjuiste verwerking van afval. Neem contact op met uw gemeente voor meer informatie over het dichtstbijzijnde inzamelingspunt of raadpleeg www.nvmp.nl, www.ictoffice.nl of www.stibat.nl.

### Voor zakelijke gebruikers in de Europese Unie

Neem voor het weggooien van elektrische en elektronische apparatuur contact op met uw leverancier voor verdere informatie.

### Informatie over verwijdering van afval in landen buiten de Europese Unie

Dit symbool is alleen geldig in de Europese Unie.
Neem wanneer u dit product wilt weggooien, contact op met de lokale overheid of uw leverancier en vraag wat de juiste verwijderingsmethode is.

**(Swedish)**

## Information om kassering för användare av elektrisk & elektronisk utrustning (privata konsumenter)

Om denna symbol finns på produkterna och/eller medföljande dokumentation, betyder det att förbrukade elektriska och elektroniska produkter inte ska blandas med vanliga hushållssopor.
För korrekt hantering, inhämtning och återvinning, ska dessa produkter lämnas på återvinningscentraler, där de tas emot utan kostnad. I vissa länder kan du som ett alternativ lämna in dina produkter hos återförsäljaren, när du köper en motsvarande, ny produkt.
Om denna produkt avyttras korrekt sparas värdefulla resurser och eventuellt negativa effekter på den mänskliga hälsan och miljön förhindras, vilket kan bli fallet vid felaktig avyttring. Kontakta din lokala myndighet för mer information om var din närmsta återvinningsstation finns.
Böter kan tillämpas vid felaktig avyttring av dessa sopor, i enlighet med lagstiftningen i landet.

### För företagsanvändare inom den Europeiska gemenskapen

Om ni vill kassera elektrisk eller elektronisk utrustning, vänligen kontakta er återförsäljare eller leverantör för mer information.

### Information om kassering i övriga länder utanför den Europeiska gemenskapen

Denna symbol gäller bara inom den Europeiska gemenskapen.
Om du vill kassera denna produkt ska du kontakta de lokala myndigheterna eller din återförsäljare, och fråga om korrekt avyttringsmetod.

# STACKING INCUBATORS

Use the following procedure to stack incubators. This work is potentially dangerous, so contact our sales representative or agent.

**⚠CAUTION**

- **Select a floor that is strong enough to support the stacked incubators.**
- **Never stack 4 or more incubators.** Doing so is dangerous.

**(When stacking 2 incubators)**

**1.** Take out 2 stacking plates A, 2 stacking plates B, 4 protective stickers, and 4 screws from accessory bag.

**Note:**

**Use 2 stacking plates (A and B) for each one**. Only one pair of stacking plates is provided per an incubator, so take out the stacking plates (A and B) from both incubators.

**2.** Unplug both of the incubators that are to be stacked.

**3.** Remove the caps at the 2 places in the front of the top surface of the incubator that is to be on the bottom, attach the protective stickers to the 4 corners on the top surface of the incubator that is to be on the bottom. (Fig. A)

**4.** Secure stacking plate A with the screws that are provided.

**5.** Remove the front panel (4 screws, 3 connectors, 1 ground wire, 1 gas tube) from the incubator that is to be on the top.

**6.** Place the upper incubator on top of the lower one, being careful not to pinch your fingers.

**7.** Make the lower incubator level by adjusting the leveling feet, and then level the upper incubator in the same way.

**8.** Secure the stacking plate A fixed to the lower incubator to the upper incubator with the accessory screws.

**9.** Remove from the back of the lower incubator the 2 hooks (4 screws) and remove from the upper incubator the 2 screws on the lower rear panel.

**10.** Use the 6 screws that were removed in step 9 to secure stacking plate B to the rear panels of the upper and lower incubators.

**11.** Replace the front panel (4 screws, 3 connectors, 1 ground wire, 1 gas tube) to the upper incubator.

**12.** Use the hooks on the back of the upper incubator to prevent the incubators from falling over.

**(When stacking 3 incubators)**

**13.** Perform again the procedure from step 3

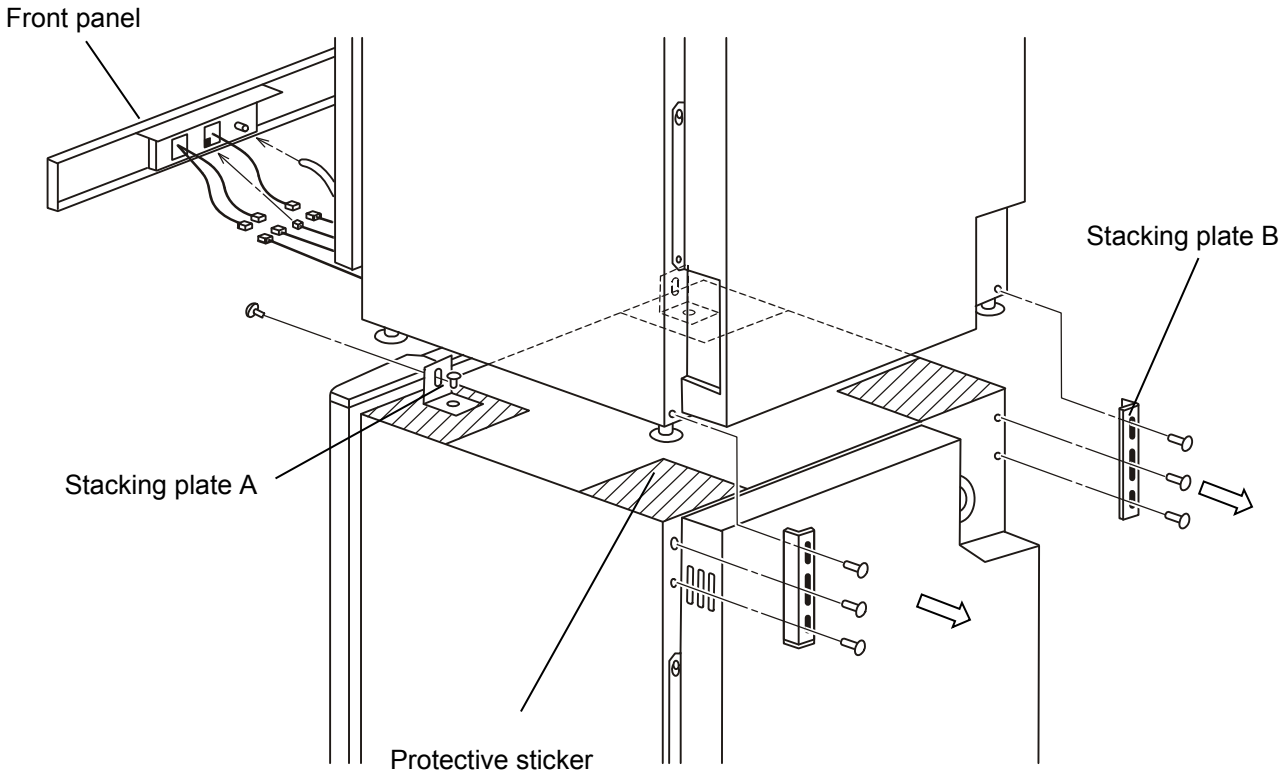


Fig.A ＜View from quarter rear side＞

# SPECIFICATIONS

| | |
|---|---|
| Product name | $O_2$/$CO_2$ Incubator MCO-5M |
| External dimensions | W480 mm x D548 mm x H575 mm (W18.9 inch x D21.6 inch x H22.6 inch) |
| Internal dimensions | W350 mm x D378 mm x H375 mm (W13.8 inch x D14.9 inch x H14.8 inch) |
| Interior volume | 49 L (1.73 cu.ft.) |
| Exterior | Painted steel |
| Interior | Stainless steel containing copper (R corner structure) |
| Outer door | Painted steel, reversible support (selectable right or left-hand door) |
| Inner door | Tempered glass |
| Trays | Made of stainless steel containing copper (standard 3 trays , maximum 6 trays )<br>W310 mm x D310 mm x H12 mm (W12.2 inch x D12.2 inch x H0.47 inch)<br>Maximum load; 4 kg/tray |
| Access port | Inner diameter; 30 mm (1.18 inch), On the back side |
| Insulation | Rigid polyurethane foamed-in place |
| Heating system | Direct Heat & Air (DHA) jacket system |
| Heater | 180 W |
| Humidifying system | Natural evaporation with humidifying pan |
| Temperature controller | PID control system |
| Temperature display | Digital display |
| $CO_2$ controller | PID control system/TC sensor(direct detection in chamber) |
| $CO_2$ density display | Digital display |
| $O_2$ controller | PID control system/Zirconia sensor(direct detection in chamber) |
| $O_2$ density display | Digital display |
| Air circulation | Fan assisted |
| Air filter | 0.3 μm, Efficiency; 99.97 % or higher |
| Water level sensor | Optical type |
| Alarms | Automatic set temperature alarm, Automatic set $CO_2$ density alarm<br>Automatic set $O_2$ density alarm, High limit temperature alarm<br>Various gas/sensor/heater alarms |
| Remote alarm contacts | Allowable contact capacity: DC 30 V, 2 A |
| Gas inlet connection | 4 mm to 6 mm (0.157 inch to 0.236 inch) diameter tube can be connected |
| $CO_2$ inlet pressure | 0.03 MPa(G) (0.3 kgf/cm$^2$(G), 4.4 psi(G)) |
| $O_2$ inlet pressure | 0.05 MPa(G) (0.5 kgf/cm$^2$(G), 7.3 psi(G)) |

# SPECIFICATIONS

| | |
|---|---|
| Product name | $O_2/CO_2$ Incubator MCO-5M |
| Accessories | 1 power supply removable cord*1, 3 trays, 3 gas tube, 1 humidifying pan<br>1 gas injection nozzle, 1 gas injection nozzle tube<br>1 pair of stacking plates A and B, 4 protective stickers, 6 tube bands |
| Weight | 50 kg |
| Optional accessories | UV system set (MCO-19UVS)<br>Gas auto changer (MCO-5GC), Gas regulator (MCO-010R)<br>Tray (MCO-30ST), Roller base (MCO-5RB)<br>Interface board (MTR-L03)*2, Interface board (MTR-480)*2<br>Interface board (MCO-420MA, USA only) |

**Note**: Refer to the updated catalog when ordering an optional component.
Designs and specifications are subject to change without notice.

*1: For the MCO-5M for EU countries, 2 power supply removable cords are supplied with it.
a) Power supply removable cord for UK
b) Power supply removable cord for EU countries other than UK
Refer to page 27.

*2: Only for the Data acquisition system MTR-5000 user.

# PERFORMANCE

| Product name | $O_2/CO_2$ Incubator MCO-5M | | | |
|---|---|---|---|---|
| Model number | MCO-5M-PT | MCO-5M-PA | MCO-5M-PK | MCO-5M-PE |
| Temperature control range | Ambient temperature +5 °C to 50 °C (ambient temperature; 5 °C to 35 °C) | | | |
| Temperature distribution | ±0.25 °C (ambient temperature; 25 °C, setting; 37 °C, $CO_2$: 5 %, $O_2$: 5 %, no load) | | | |
| Temperature variation | ±0.1 °C (ambient temperature; 25 °C, setting; 37 °C, $CO_2$: 5 %, $O_2$: 5 %, no load) | | | |
| $CO_2$ control range | 0 % to 20% | | | |
| $CO_2$ variation | ±0.15 % (ambient temperature; 25 °C, setting; 37 °C, $CO_2$: 5 %, $O_2$: 5 %, no load) | | | |
| $O_2$ control range | 1 % to 18 %, 22 % to 80% | | | |
| $O_2$ variation | ±0.2 % (ambient temperature; 25 °C, setting; 37 °C, $CO_2$: 5 %, $O_2$: 5 %, no load) | | | |
| Chamber humidity | 95 %R.H.± 5 %R.H. | | | |
| Applicable environment condition | Temperature; 5 °C to 35 °C, Humidity; equal or less than 80 %R.H.<br>(The designed performance may not be obtained when the ambient temperature is equal or less than 15 °C) | | | |
| Noise level | 24 dB (A scale) | | | |
| Power consumption | Max. 205 W | | | |
| Heat emission | Max. 740 kJ/h | | | |
| Rated voltage, frequency | AC 110 V-120 V, 60 Hz | | AC 220 V, 60 Hz | AC 220 V-240 V 50 Hz |
| Amperage | Max. 1.8 A | | Max. 0.9 A | Max. 0.9 A |

**Note:** The unit with CE mark complies with EU directives.
Based on our measuring method.

## ⚠ CAUTION

**Please fill in this form before servicing.**
**Hand over this form to the service engineer to keep for his and your safety.**

# Safety check sheet

1. Unit contents

| | | |
|---|---|---|
| Risk of infection: | ☐Yes | ☐No |
| Risk of toxicity: | ☐Yes | ☐No |
| Risk from radioactive sources: | ☐Yes | ☐No |

(List all potentially hazardous materials that have been stored in this unit.)
Notes :

2. Contamination of the unit

Unit interior

| | | |
|---|---|---|
| No contamination | ☐Yes | ☐No |
| Decontaminated | ☐Yes | ☐No |
| Contaminated | ☐Yes | ☐No |

Others:

3. Instructions for safe repair/maintenance of the unit

| | | |
|---|---|---|
| a) The unit is safe to work on | ☐Yes | ☐No |
| b) There is some danger (see below) | ☐Yes | ☐No |

Procedure to be adhered to in order to reduce safety risk indicated in b) below.

Date :
Signature :
Address, Division :
Telephone :

| Product name : | Model No. | Serial number : | Date of Installation : |
|---|---|---|---|
| $O_2$/$CO_2$ incubator | MCO- | | |

Please decontaminate the unit yourself before calling the service engineer.

PHC Corporation
1-1-1 Sakada, Oizumi-machi, Ora-gun, Gunma 370-0596, Japan



Printed in Japan
LDCL041900-0
S0418-0